E20795

Mounting set for position sensors

CLAMP M12 ROD MOUNTING

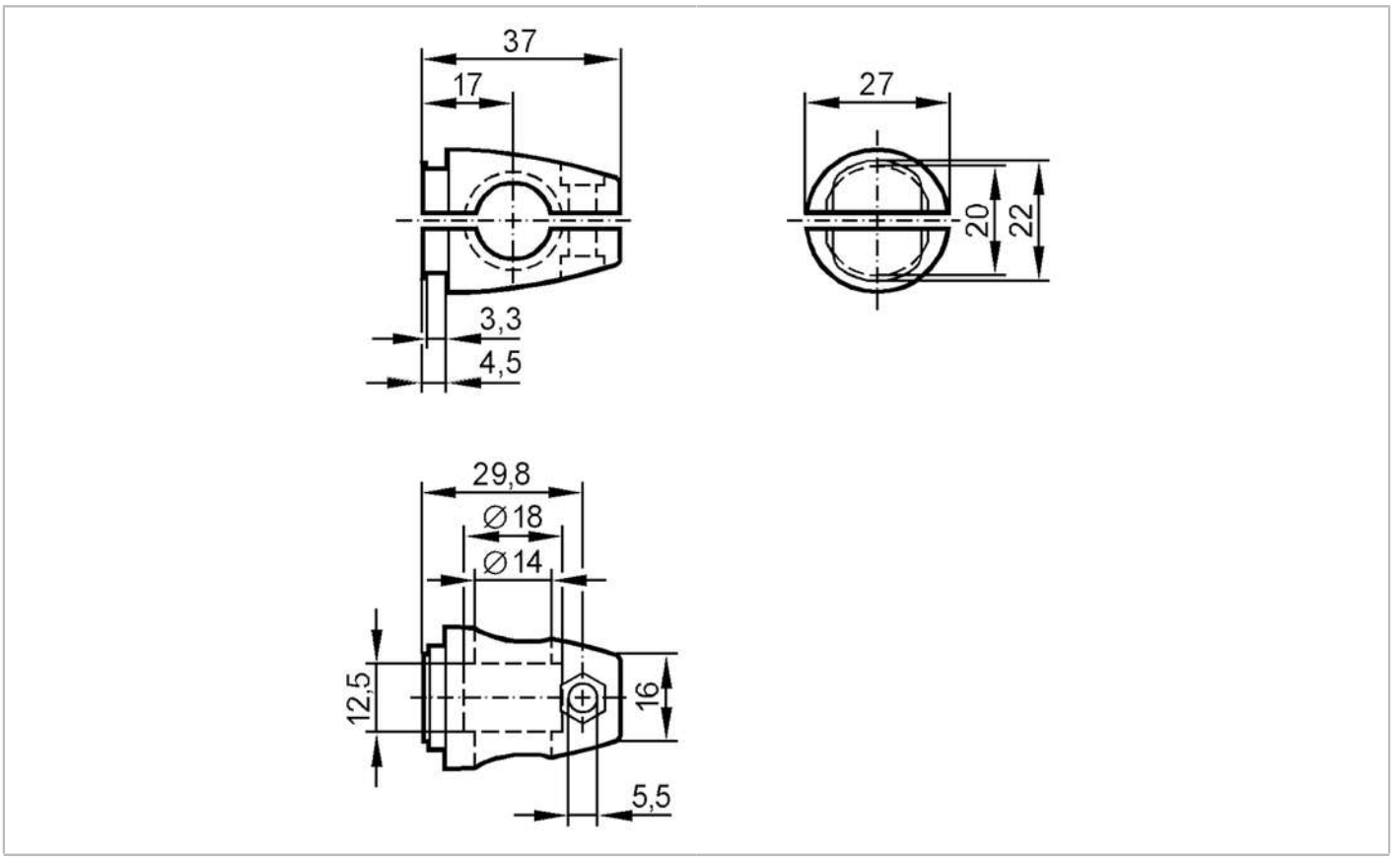

Mechanical data		
Weight	[g]	72.5
Type of mounting		Mounting rod; (Ø 14 mm)
Dimensions	[mm]	M12
Thread designation		M12
Materials		Clamp: diecast zinc

Remarks	
Pack quantity	1 pcs.