Compact cylinder ISO 21287, Series CCI

R422001039

AVENTICS Series CCI Compact cylinders (ISO 21287)

The AVENTICS Series CCI (ISO 21287) cylinders stand for innovative, compact construction and an easy to clean design. The Series CCI (ISO 21287) is ideal for long strokes and increased requirements for optimized cycle times and moving masses. The sensors can be installed quickly and easily on all sides and over the entire cylinder lengths.





Technical data

Industry	Industrial
Standards	ISO 21287
Piston Ø	80 mm
Stroke	20 mm
Ports	G 1/8
Functional principle	Double-acting
Cushioning	Elastic cushioning
Magnetic piston	Piston with magnet
Environmental requirements	Industry standard ATEX optional
Piston rod thread - type	Internal thread
Piston rod thread	M12
Piston rod	single
Scraper	Standard Industry Scraper
Pressure for determining piston forces	6,3 bar
Retracting piston force	2969 N
Extracting piston force	3167 N
Min. ambient temperature	-20 °C
Max. ambient temperature	80 °C
Min. working pressure	1 bar
Max. working pressure	10 bar
Impact energy	1.8 J
Weight 0 mm stroke	1.11 kg
Weight +10 mm stroke	0.116 kg

Stroke max.	500 mm
Medium	Compressed air
Min. medium temperature	-20 °C
Max. medium temperature	80 °C
Max. particle size	50 µm
Min. oil content of compressed air	0 mg/m³
Max. oil content of compressed air	5 mg/m³

Material

Piston rod	Stainless Steel
Scraper material	Polyurethane
Seal material	Polyurethane
Material, front cover	Aluminum
Cylinder tube	Aluminum
End cover	Aluminum
Part No.	R422001039

Technical information

ATEX-certified cylinders with identification II 2G Ex h IIC T4 Gb / II 2D Ex h IIIC T135°C Db_X can be generated in the Internet configurator.

The operating temperature range for ATEX-certified cylinders is -20°C ... 60°C.

With cylinders with a piston rod extension, dimensions "WH" and "ZB" are increased by the value of the piston rod extension.

The pressure dew point must be at least 15 °C less than ambient and medium temperature and may not exceed 3 °C.

The oil content of compressed air must remain constant during the life cycle.

Use only the approved oils from AVENTICS. Further information can be found in the “Technical information” document (available in https://www.emerson.com/en-us/support).

Compact cylinder ISO 21287, Series CCI

R422001039

Dimensions

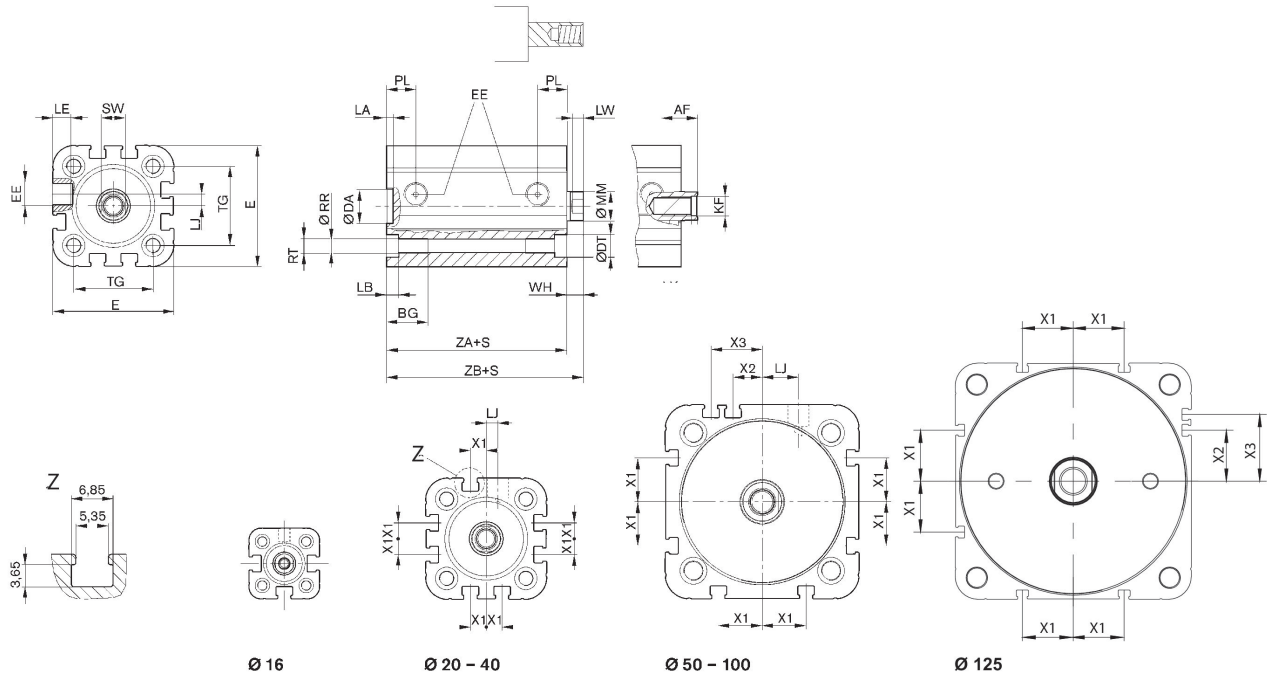

Piston Ø	AF	BG	DA H11	DT	E	EE	KF	LA	LB
16	10	15	10	6	29.3	M5	M4	2.5	3.5
20	12	15.5	12	7.5	36.3	M5	M6	2.5	4.5
25	12	15.5	12	8	40.3	M5	M6	2.5	4.5
32	12	17	14	8.6	50	G 1/8	M8	2.5	5
40	12	17	14	9.2	58	G 1/8	M8	2.5	5
50	16	17	18	11	68.3	G 1/8	M10	2.5	5
63	16	17	18	11	80	G 1/8	M10	2.5	5
80	20	20	23	15	96	G 1/8	M12	3	5
100	20	20	28	15	116	G 1/8	M12	3	5
125	25	35	12	-	134.6	G 1/4	M16	2.6	-

Piston Ø	LE	LJ	LW	MM f8	PL	RR	RT 6H	SW	TG
16	4.5	0	4	8	8	3.3	M4	7	18
20	4.5	4.5	4	10	10	4.2	M5	8	22
25	4.5	4	4	10	10	4.2	M5	8	26
32	7.5	4.85	4.5	12	12	5.1	M6	10	32.5
40	7.5	9.85	4.5	12	12	5.1	M6	10	38
50	7.5	12	6	16	12	6.7	M8	13	46.5
63	7.5	14.8	6	16	12	6.7	M8	13	56.5
80	7.5	22	7	20	14	8.5	M10	16	72
100	7.5	27	7	25	16.5	8.5	M10	21	89
125	???	39	7.5	25	20.5	11.1	M12	21	110

Piston Ø	WH	X1	X2	X3	ZA ±0,1	ZB
16	4,8 ±0,9	–	–	–	34.9	39,7 ±0,8
20	5,6 ±0,9	4.2	–	–	37.3	43,6 ±0,8
25	5,6 ±0,9	4.5	–	–	39	44,5 ±0,9
32	7,4 ±0,9	6.5	–	–	44	51,4 ±1
40	7,4 ±0,9	11	–	–	45	52,4 ±1
50	8,4 ±0,9	13	4	13	45.5	53,6 ±1
63	8,5 ±0,9	18	12	21	49	57,4 ±1
80	9,8 ±1	18	16.5	25.5	54.7	64,4 ±1
100	9,8 ±1	20	20	29	67	76,7 ±1
125	11	29	29	38	81	92

Maximum admissible lateral force dynamic

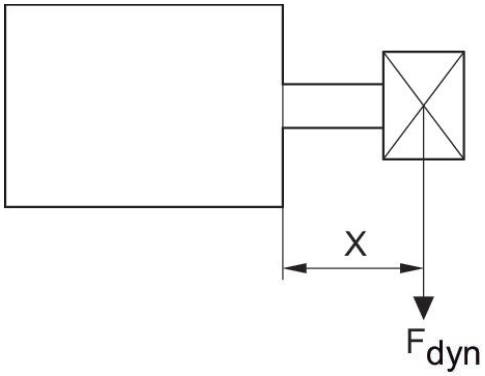

F dyn. = dynamic lateral force
X = distance between force application point and cylinder cover
S = stroke

Maximum admissible lateral force dynamic

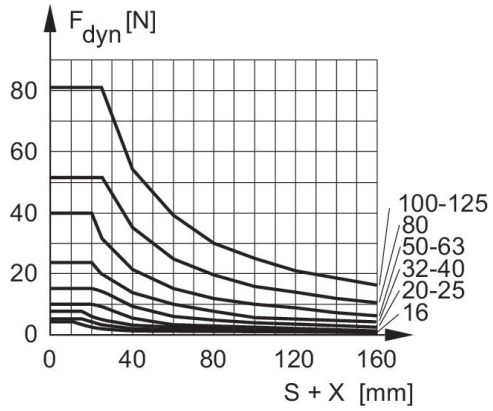

F dyn. = dynamic lateral force
X = distance between force application point and cylinder cover
S = stroke

Maximum admissible lateral force static

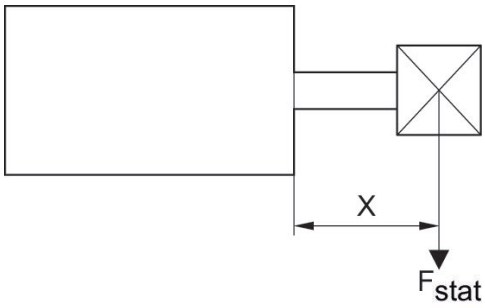

F stat. = static lateral force
X = distance between force application point and cylinder cover

Maximum admissible lateral force static

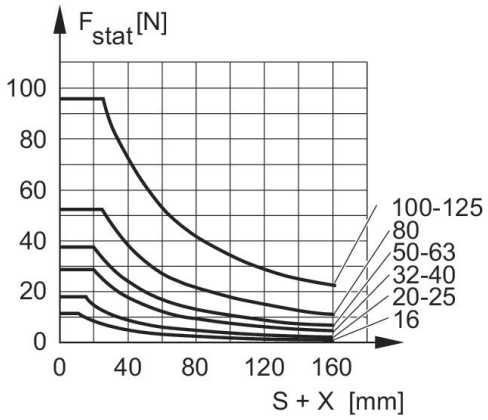

F stat. = static lateral force
X = distance between force application point and cylinder cover
S = stroke

Overview drawing

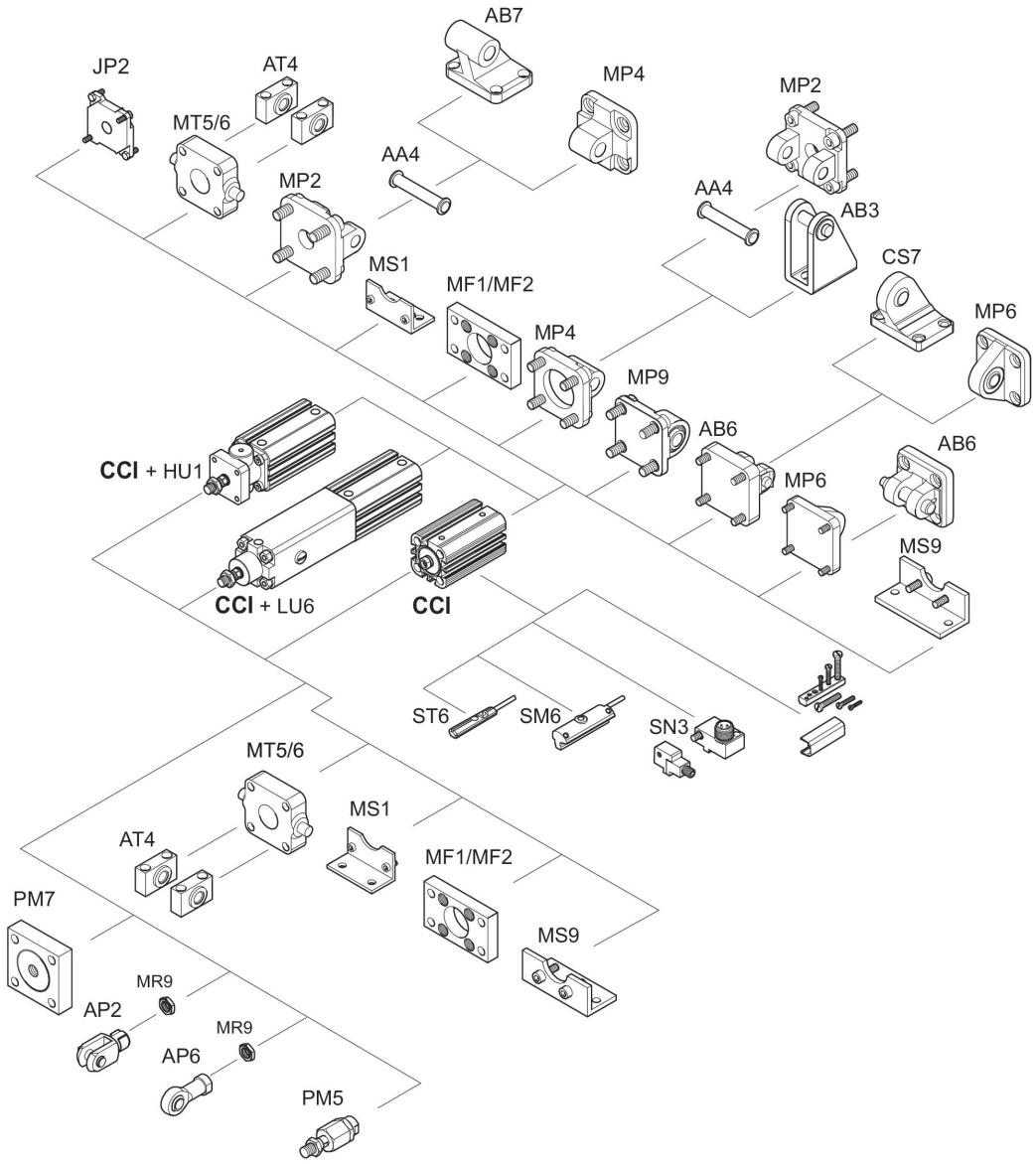

NOTE: This overview drawing is only for orientation to indicate where the various accessory parts can be fastened to the cylinder. The illustration has been simplified for this purpose. It is thus not possible to derive the dimensions from this overview.