Short-stroke cylinder, Series KHZ

0822010635

2024-04-09

AVENTICS Series KHZ Short-stroke cylinders

The AVENTICS Series KHZ is a non-standard short-stroke cylinder ideal for tight installation spaces and ensure easy, safe integration in machinery.





Technical data

Industry	Industrial
Piston Ø	25 mm
Stroke	30 mm
Ports	G 1/8
Functional principle	Double-acting
Cushioning	Elastic cushioning
Magnetic piston	Piston with magnet
Environmental requirements	Industry standard
Piston rod thread - type	Internal thread
Piston rod thread	M5
Piston rod	single
Scraper	Standard Industry Scraper
Pressure for determining piston forces	6,3 bar
Retracting piston force	260 N
Extracting piston force	309 N
Min. ambient temperature	-25 °C
Max. ambient temperature	80 °C
Min. working pressure	1 bar
Max. working pressure	10 bar
Impact energy	0.1 J
Weight 0 mm stroke	0.178 kg
Weight +10 mm stroke	0.03 kg
Medium	Compressed air
Min. medium temperature	-25 °C

Short-stroke cylinder, Series KHZ

0822010635

Max. medium temperature	80 °C
~~Max. particle size~~	~~50 µm~~
Min. oil content of compressed air	0 mg/m³
Max. oil content of compressed air	5 mg/m³

Material

Piston rod	Stainless Steel
Piston material	Nitrile rubber
Scraper material	Polyurethane
Material, front cover	Brass
Cylinder tube	Aluminum
End cover	Aluminum
Part No.	0822010635

Technical information

Other versions can be ordered from AVENTICS sales offices.

The pressure dew point must be at least 15 °C less than ambient and medium temperature and may not exceed 3 °C.

The oil content of compressed air must remain constant during the life cycle.

Use only the approved oils from AVENTICS. Further information can be found in the “Technical information” document (available in https://www.emerson.com/en-us/support).

Short-stroke cylinder, Series KHZ

0822010635

Dimensions

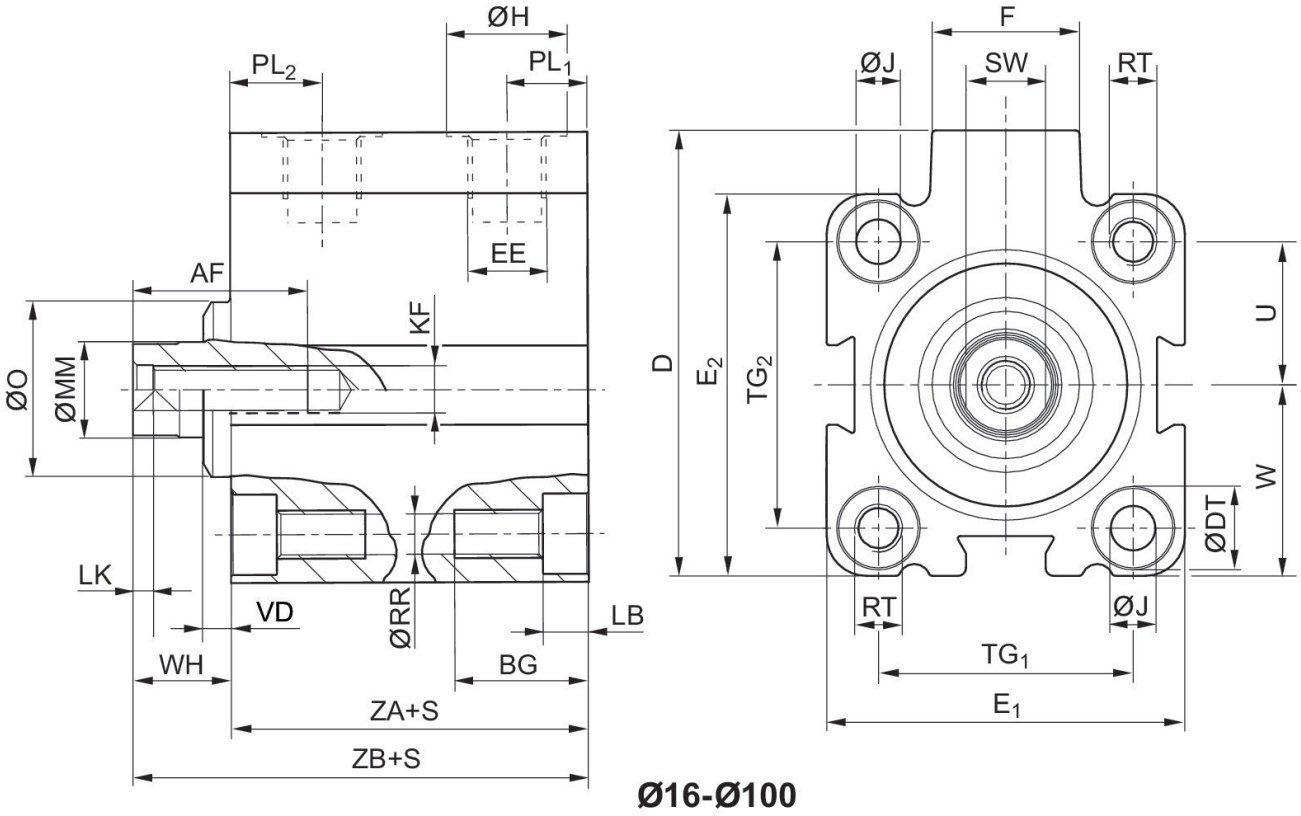

Ø16-Ø100

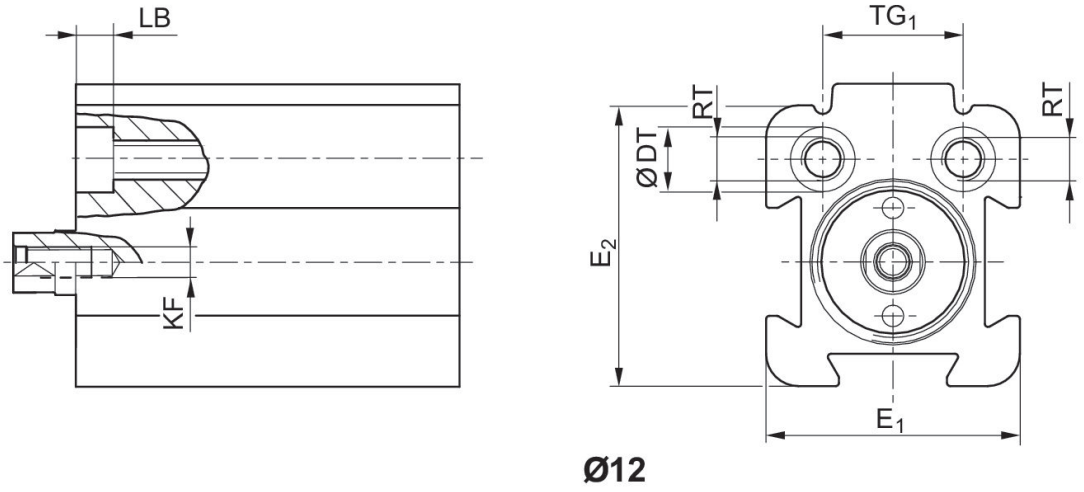

Ø12

S = stroke

Piston Ø	Stroke	AF +1	BG min.	D JS15	ØDT H13	E1 JS15	E2 JS15	EE	F
12	5 - 10	8	12.4	28	6	23.5	26	M 5	11
16	5 - 10	10	12.4	33	6	28	28	M 5	11.5
20	5 - 10	10	13.6	37	7.5	32	32	M 5	11
25	5 - 50	10	13.6	47.5	8	37	39	G 1/8	17.5
32	5 - 100	15	16.7	56	10	45	48	G 1/8	18.5

Short-stroke cylinder, Series KHZ

0822010635

Piston Ø	Stroke	AF +1	BG min.	D JS15	ØDT H13	E1 JS15	E2 JS15	EE	F
40	5 - 100	15	16.7	62.5	10	54.5	54	G 1/8	18.5
50	10 - 100	18	19.8	73	11	66	66	G 1/8	18
63	10 - 100	18	25	88	15	80	80	G 1/8	23
80	10 - 100	18	25	110	15	100	100	G 1/4	27
100	10 - 100	20	30	132	17.5	124	124	G 1/4	28

Piston Ø	ØH	ØJ	KF	LB +0,4	LK +0,5	ØMM f8	ØO	PL1	PL2
12	8	3.3	M3	3.4	2	6	–	6	10.5
16	8	3.55	M5	3.4	2	8	–	6.5	11.3
20	8	4.55	M5	4.6	2	10	–	6.5	10
25	15	4.55	M5	4.6	2	10	20	9.5	11.5
32	15	5.5	M6	5.7	2.5	12	22	8.5	15
40	15	5.5	M6	5.7	2.5	12	30	10	13.5
50	15	7.3	M8	6.8	3.5	16	35	10	14
63	15	9.2	M8	9	3.5	16	35	11.5	14
80	19	9.2	M10	9	4	20	46	12	15.5
100	19	11	M12	11	4	25	56	12	18.5

Piston Ø	ØRR	RT	SW -0,3	TG1	TG2	U	W	VD -1	WH
12	3.3	M4	5	13 ±0,2	–	9.5	11,5 ±0,2	–	5.5
16	3.3	M4	7	20 ±0,2	20 ±0,2	10	14 ±0,2	–	4.5
20	4.2	M5	8	22 ±0,2	22 ±0,2	11	16 ±0,2	–	4.5
25	4.2	M5	8	26 ±0,25	28 ±0,25	14	19,5 ±0,2	3.5	9.5
32	5.05	M6	10	32 ±0,25	36 ±0,25	18	24 ±0,2	3.5	11
40	5.05	M6	10	40 ±0,25	40 ±0,25	20	27,3 ±0,2	4.5	13.5
50	6.8	M8	13	50 ±0,25	50 ±0,25	25	33 ±0,2	6	13.5
63	8.5	M10	13	62 ±0,25	62 ±0,25	31	40 ±0,2	6.5	15.5
80	8.5	M10	17	82 ±0,3	82 ±0,3	41	50 ±0,3	8.5	18
100	10.2	M12	22	103 ±0,3	103 ±0,3	51.5	62 ±0,3	7	20

Piston Ø	ZA ±0,2	ZB ±0,8
12	30.5	36
16	32	36.5
20	32	36.5
25	39	48.5
32	39.5	50.5
40	39.5	53
50	39.5	53
63	42	57.5
80	46	64
100	56	76

Short-stroke cylinder, Series KHZ

0822010635

Overview drawing

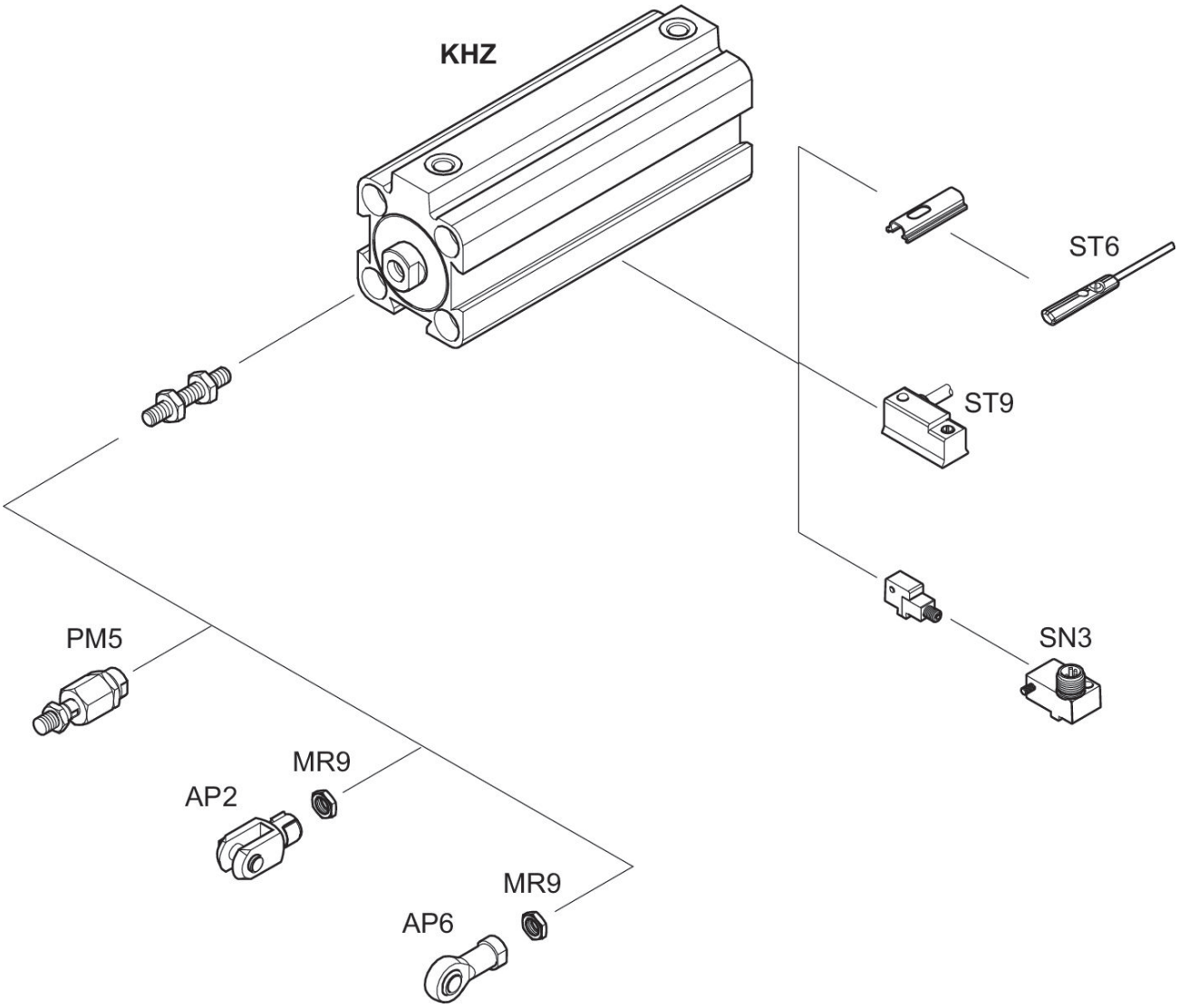

NOTE: This overview drawing is only for orientation to indicate where the various accessory parts can be fastened to the cylinder. The illustration has been simplified for this purpose. It is thus not possible to derive the dimensions from this overview.