# E43350

## Centring piece for probes

CENTERING DEVICE LR PROBE

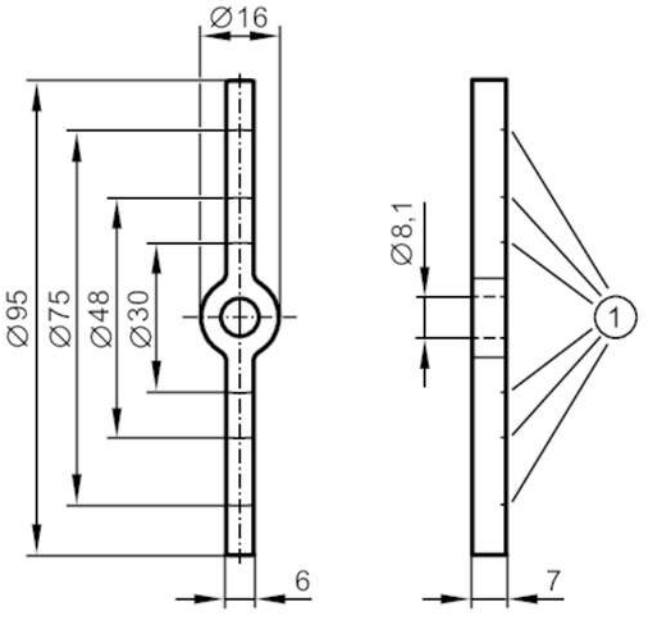


| | | |
|---|---|---|
| **Application** | | |
| Design | | for probes LR, for bypass and internal pipe diameter 30...100 mm |
| **Mechanical data** | | |
| Weight | [g] | 8.4 |
| Materials | | PEEK-GF30 |
| **Accessories** | | |
| Items supplied | | retaining rings: 2 |
| **Remarks** | | |
| Pack quantity | | 1 pcs. |