# OJ5190

## Retro-reflective sensor for the detection of transparent objects

OJPGFPKG/FO/0,15M/US

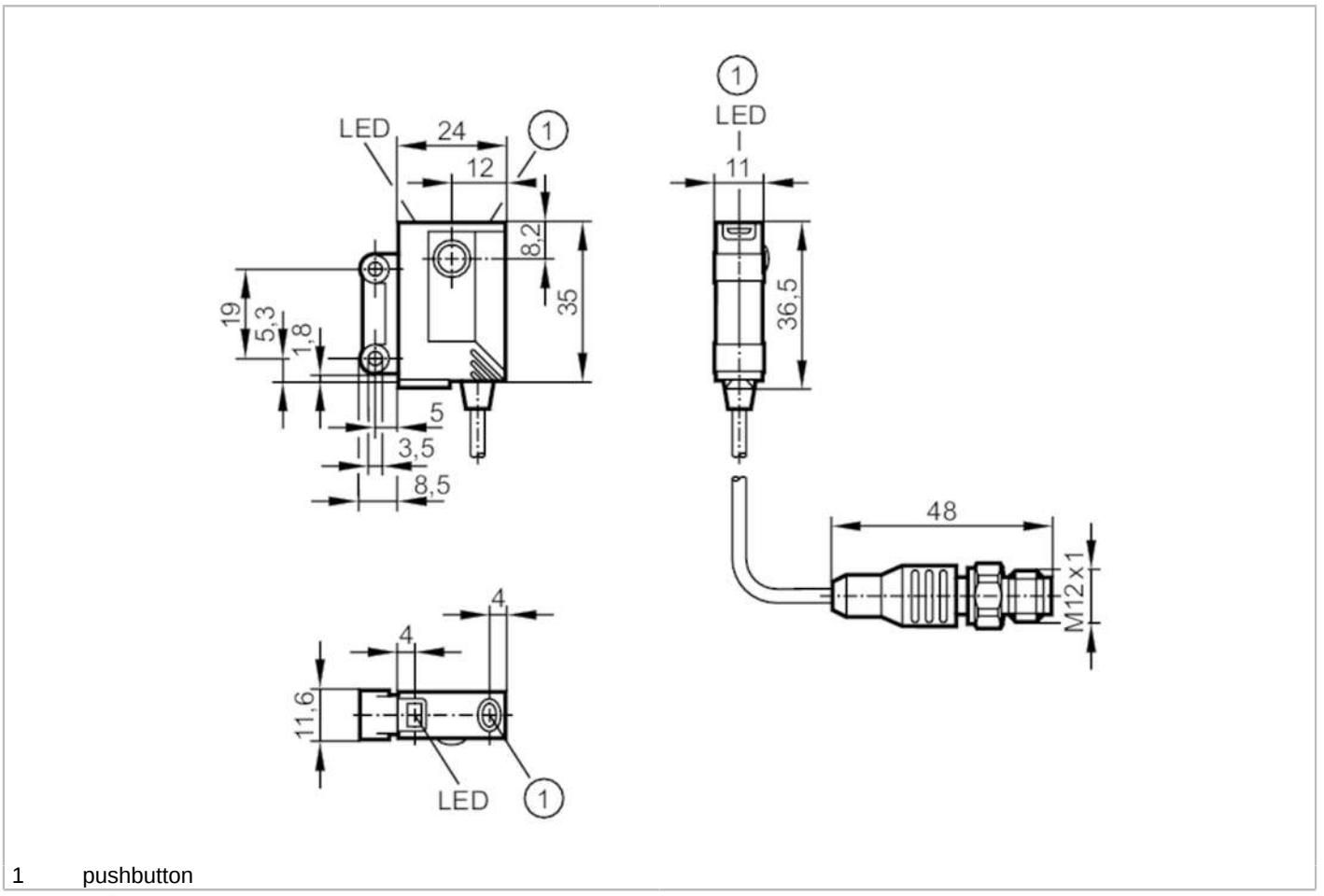


1 pushbutton

| | | |
|---|---|---|
| **Product characteristics** | | |
| Type of light | | red light |
| Housing | | rectangular |
| **Application** | | |
| Special feature | | polarisation filter |
| Function principle | | Retro-reflective sensor |
| **Electrical data** | | |
| Operating voltage | [V] | 10...30 DC |
| Current consumption | [mA] | < 22 |
| Protection class | | III |
| Reverse polarity protection | | yes |
| Type of light | | red light |
| Wave length | [nm] | 660 |
| **Outputs** | | |
| Electrical design | | PNP |
| Output function | | light-on/dark-on mode; (programmable) |
| Max. voltage drop switching output DC | [V] | 2.5 |

# OJ5190

## Retro-reflective sensor for the detection of transparent objects

OJPGFPKG/FO/0,15M/US

| | | | |
|---|---|---|---|
| Permanent current rating of switching output DC | [mA] | 200 | |
| Switching frequency DC | [Hz] | 2000 | |
| Short-circuit protection | | yes | |
| Type of short-circuit protection | | pulsed | |
| Overload protection | | yes | |
| **Detection zone** | | | |
| Range referred to prismatic reflector | [m] | 0.2...1.5;  (Prismatic reflector 50 x 50 mm E20722) | |
| Range adjustable | | yes | |
| Max. light spot diameter | [mm] | 64 | |
| Light spot dimensions refer to | | at maximum range | |
| Polarisation filter available | | yes | |
| **Operating conditions** | | | |
| Ambient temperature | [°C] | 0...60 | |
| Protection | | IP 67 | |
| **Tests / approvals** | | | |
| EMC | | EN 60947-5-2 | |
| MTTF | [years] | 867 | |
| **Mechanical data** | | | |
| Weight | [g] | 41.1 | |
| Housing | | rectangular | |
| Dimensions | [mm] | 35 x 24 x 11 | |
| Materials | | housing: ABS; LED window: SEPS; pushbutton: SEPS | |
| Lens material | | glass | |
| Lens alignment | | front lens | |
| **Displays / operating elements** | | | |
| Display | | switching status | 1 x LED, yellow |
| | | operation | 1 x LED, green |
| | | function | 1 x LED, red |
| **Accessories** | | | |
| Items supplied | | screws: 2 | |
| | | spring washers: 2 | |
| | | Nuts: 2 | |
| **Remarks** | | | |
| Remarks | | operating voltage "supply class 2" according to cULus | |
| Pack quantity | | 1 pcs. | |

# OJ5190

## Retro-reflective sensor for the detection of transparent objects

**OJPGFPKG/FO/0,15M/US**

### Electrical connection

Cable: 0.15 m, PVC

Connector: 1 x M12; coding: A




### Connection

