CBA-SMAF-SMAM3RGD

RG405 SMA female to SMA male 300mm

Features

Length	300mm
Frequency Range	DC-6GHz
VSWR	≤1.30
Impedance	50Ω
Temp Range	-55~+155°C
Durability (mating)	>500 Cycles
Insulation Resistance	≥5000MΩ
Working Voltage	335Vrms
Absolute Max Voltage	1000Vrms



Material Information

Body	Gold coated brass
Pin/Socket contact	Gold coated brass
Cable Type	RG405 Semi Flexible

SMA Female End



SMA Male End



Ordering Information

Part Number	Description
CBA-SMAF-SMAM3RGD	Semi Rigid Coax Cable Assy RG405 SMA female to SMA male 300mm

RF Cable Assemblies

Mechanical Detail

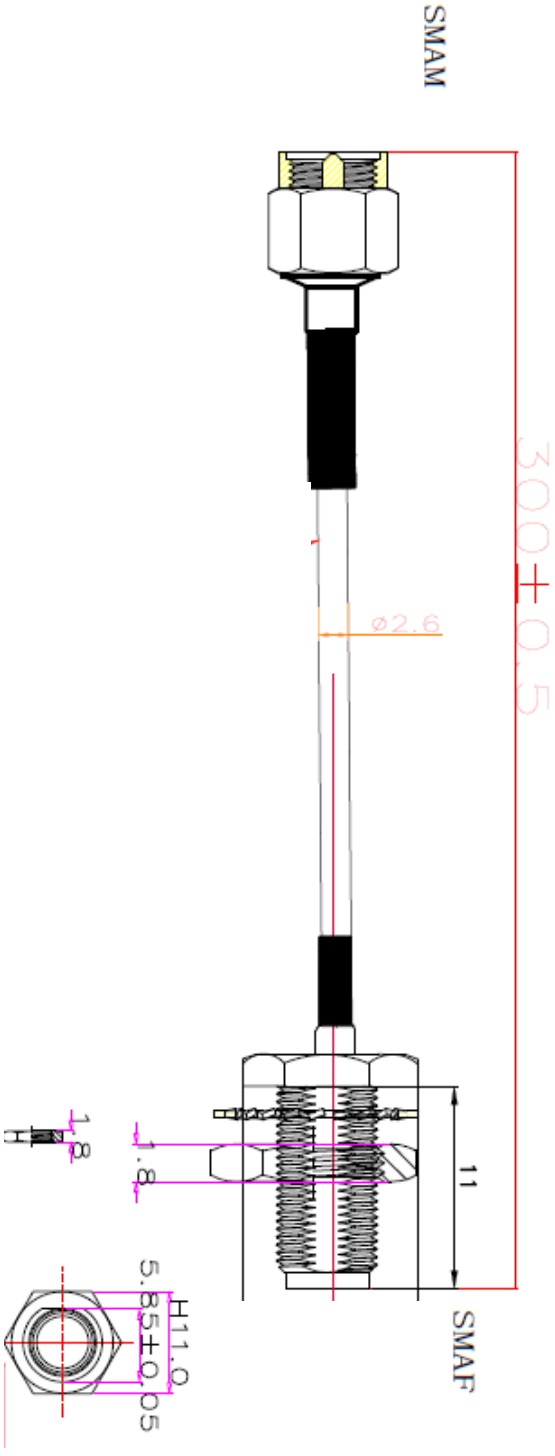

RF Solutions Ltd. Recycling Notice
Meets the following EC Directives: **DO NOT** Discard with normal waste, please recycle.
ROHS Directive 2011/65/EU and amendment 2015/863/EU Specifies certain limits for hazardous substances.
WEEE Directive 2012/19/EU Waste electrical & electronic equipment. This product must be disposed of through a licensed WEEE collection point. RF Solutions Ltd., fulfils its WEEE obligations by membership of an approved compliance scheme, environment agency registration number: **WEE/JB0104WV.**

Disclaimer:
Whilst the information in this document is believed to be correct at the time of issue, RF Solutions Ltd does not accept any liability whatsoever for its accuracy, adequacy or completeness. No express or implied warranty or representation is given relating to the information contained in this document. RF Solutions Ltd reserves the right to make changes and improvements to the product(s) described herein without notice. Buyers and other users should determine for themselves the suitability of any such information or products for their own particular requirements or specification(s). RF Solutions Ltd shall not be liable for any loss or damage caused as a result of user's own determination of how to deploy or use R F Solutions Ltd's products. Use of RF Solutions Ltd products or components in life support and/or safety applications is not authorised except with express written approval. No licences are created, implicitly or otherwise, under any of RF Solutions Ltd's intellectual property rights. Liability for loss or damage resulting or caused by reliance on the information contained herein or from the use of the product (including liability resulting from negligence or where RF Solutions Ltd was aware of the possibility of such loss or damage arising) is excluded. This will not operate to limit or restrict QuasarUK Ltd's liability for death or personal injury resulting from its negligence.