

Image may differ from product. See technical specification for details.

32020 X/DF

Matched tapered roller bearings arranged face-to-face

Matched tapered roller bearings arranged face-to-face (X-arrangement, load lines diverge towards the bearing axis) accommodate high radial loads and axial loads in both directions. The precision manufactured intermediate ring between the outer rings enables a defined internal clearance or preload to be achieved when mounted. Matched tapered roller

bearings are typically used in gearboxes, hoisting equipment, rolling mills, and machines in the mining industry.

- High radial load carrying capacity
- Designed for axial loads in both directions
- Relatively high stiffness
- Surface finish on the contact surfaces of the rollers and raceways that enhances operational reliability

Overview

Dimensions

Bore diameter	100 mm
Outside diameter	150 mm
Width, total	64 mm
Width, inner ring	64 mm
Width, outer ring	64 mm
Contact angle	17 °

Performance

Basic dynamic load rating	359 kN
Basic static load rating	560 kN
Reference speed	2 600 r/min
Limiting speed	4 000 r/min
SKF performance class	SKF Explorer

Properties

Bearing part	Complete bearing
Number of rows	2
Locating feature, bearing outer ring	None
Bore type	Cylindrical
Cage	Sheet metal
Matched arrangement	Face-to-face (X)
Number of bearings in matched set	2
Coating	Without
Sealing	Without
Lubricant	None
Relubrication feature	With

Logistics

Product net weight	3.92 kg
eClass code	23-05-09-10

Technical specification

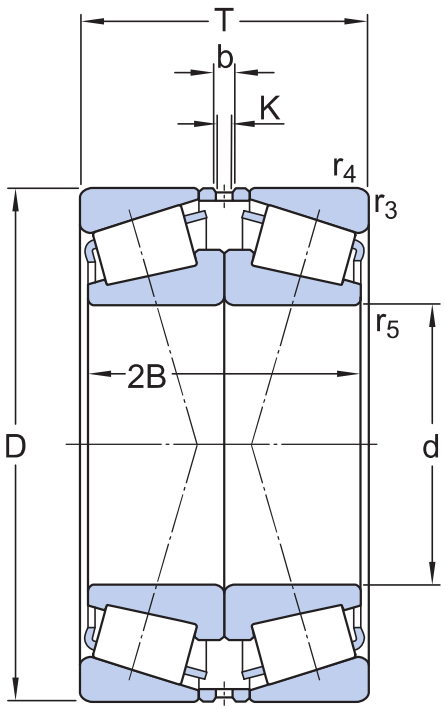

Dimensions

d	100 mm	Bore diameter
D	150 mm	Outside diameter
T	64 mm	Total width
2B	64 mm	Width of inner rings
b	10 mm	Width of lubrication groove
K	8 mm	Diameter of lubrication hole
$r_{3,4}$	min. 1.5 mm	Chamfer dimension
r_5	min. 0.6 mm	Chamfer dimension

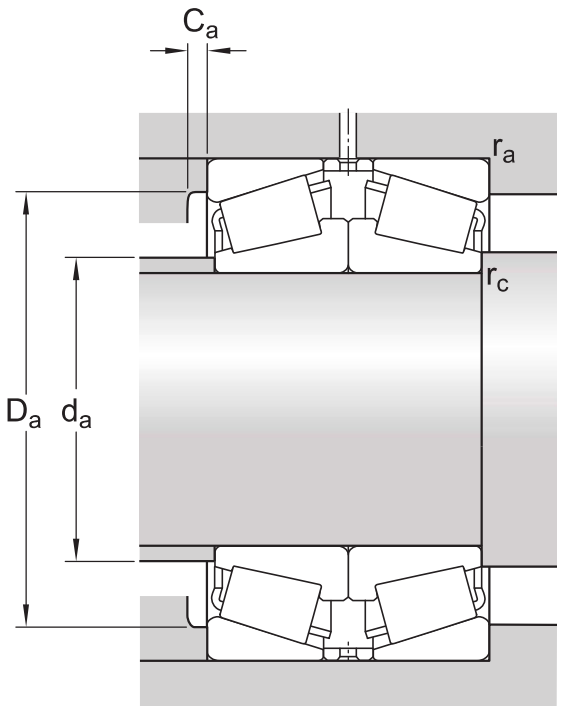

Abutment dimensions

d_a	max. 110 mm	Diameter of shaft abutment
D_a	min. 134 mm	Diameter of housing abutment
D_a	max. 141 mm	Diameter of housing abutment
C_a	min. 6 mm	Minimum width of space required in housing on large side face
r_a	max. 2 mm	Radius of fillet
r_c	max. 0.6 mm	Radius of fillet

Calculation data

SKF performance class		SKF Explorer
Basic dynamic load rating	C	359 kN
Basic static load rating	C_0	560 kN
Fatigue load limit	P_u	62 kN
Reference speed		2 600 r/min
Limiting speed		4 000 r/min
Limiting value	e	0.46
Calculation factor	Y_1	1.5
Calculation factor	Y_2	2.2

Calculation factor	Y_0	1.4

Tolerances and clearances

GENERAL BEARING SPECIFICATIONS

- Tolerances: Normal + CL7C, P5, total width
- Internal clearance: values

BEARING INTERFACES

- Seat tolerances for standard conditions
- Tolerances and resultant fit

More Information

Product details

- Designs and variants
- General bearing specifications
- Loads
- Temperature limits
- Permissible speed
- Design considerations
- Bearing designations
- Designation system

Engineering information

- Principles of rolling bearing selection
- General bearing knowledge
- Bearing selection process
- Bearing failure and how to prevent it

Tools

- SimPro Quick
- Bearing Select
- Engineering Calculator
- LubeSelect for SKF greases
- Heater Selection Tool
- Oil Injection Method Program
- skf.com/mount

Terms of use

By accessing and using this website / app owned and published by AB SKF (publ.) (556007-3495 · Gothenburg) (“SKF”), you agree to the following terms and conditions:

Warranty Disclaimer and Limitation of Liability
Although every care has been taken to assure the accuracy of the information on this website / app, SKF provides this information "AS IS" and DISCLAIMS ALL WARRANTIES, EXPRESS OR IMPLIED, INCLUDING, BUT NOT LIMITED TO, IMPLIED WARRANTIES OF MERCHANTABILITY AND FITNESS FOR A PARTICULAR PURPOSE. You acknowledge that your use of this website / app is at your sole risk, that you assume full responsibility for all costs associated with use of this website / app, and that SKF shall not be liable for any direct, incidental, consequential, or indirect damages of any kind arising out of your access to, or use of the information or software made available on this website / app.

Any warranties and representations in this website / app for SKF products or services that you purchase or use will be subject to the agreed upon terms and conditions in the contract for such product or service.

Further, for non-SKF websites / apps that are referenced in our website / app or where a hyperlink appears, SKF makes no warranties concerning the accuracy or reliability of the information in these websites / apps and assumes no responsibility for material created or published by third parties contained therein. In addition, SKF does not warrant that this website / app or these other linked websites / apps are free from viruses or other harmful elements.

Third Party Services
When viewing YouTube content via the SKF website(s) (i.e. using YouTube API Services), you agree to be bound by the YouTube Terms of Service.

Copyright
Copyright in this website / app copyright of the information and software made available on this website / app rest with SKF or its licensors. All rights are reserved. All licensed material will reference the licensor that has granted SKF the right to use the material. The information and software made available on this website / app may not be reproduced, duplicated, copied, transferred, distributed, stored, modified, downloaded or otherwise exploited for any commercial use without the prior written approval of SKF. However, it may be reproduced, stored and downloaded for use by individuals without prior written approval of SKF. Under no circumstances may this information or software be supplied to third parties.

This website /app includes certain images used under license from Shutterstock, Inc.

Trademarks and Patents
All trademarks, brand names, and corporate logos displayed on the website / app are the property of SKF or its licensors, and may not be used in any way without prior written approval by SKF. All licensed trademarks published on this website / app reference the licensor that has granted SKF the right to use the trademark. Access to this website / app does not grant to the user any license under any patents owned by or licensed to SKF.

Changes
SKF reserves the right to make changes or additions to this website / app at any time.