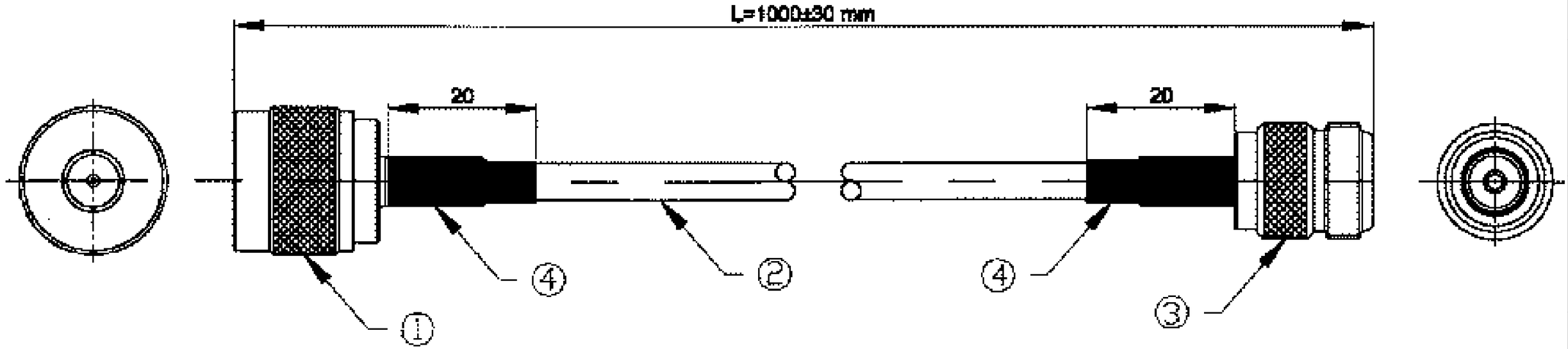





Notes

1. N Type Straight Male
2. RG58 Coax Cable
3. N Type Straight Female
4. Heatshrink

All Dimensions in mm

NOT TO SCALE

DESCRIPTION

Cable N Type Male to N Type Female 1M

FILENAME	DRAWN BY	DATE	REVISED	PAGE
CBA-NF-NM1.VSD	John Fairall		27/09/2012	1 of 1

REVISIONS

ZONE	REV	DESCRIPTION	DATE	APPROVED
N/A	1	First Issue	1.8.09	
	2			
	3			
	4			
	5			
	6			