NOTE:

1. Blend radii 2t.
2. Fillet weld corners.

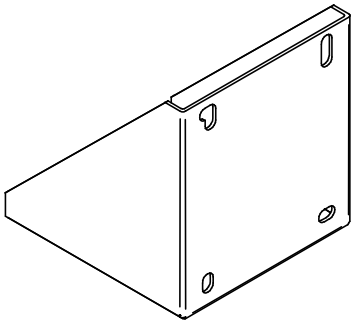

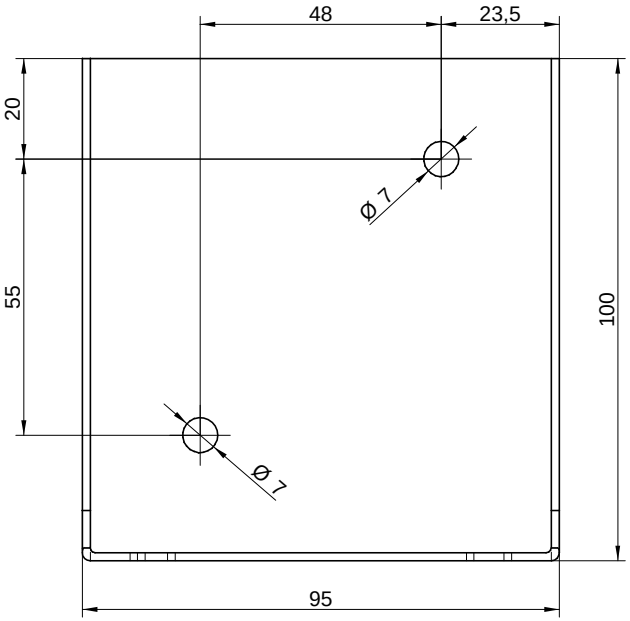

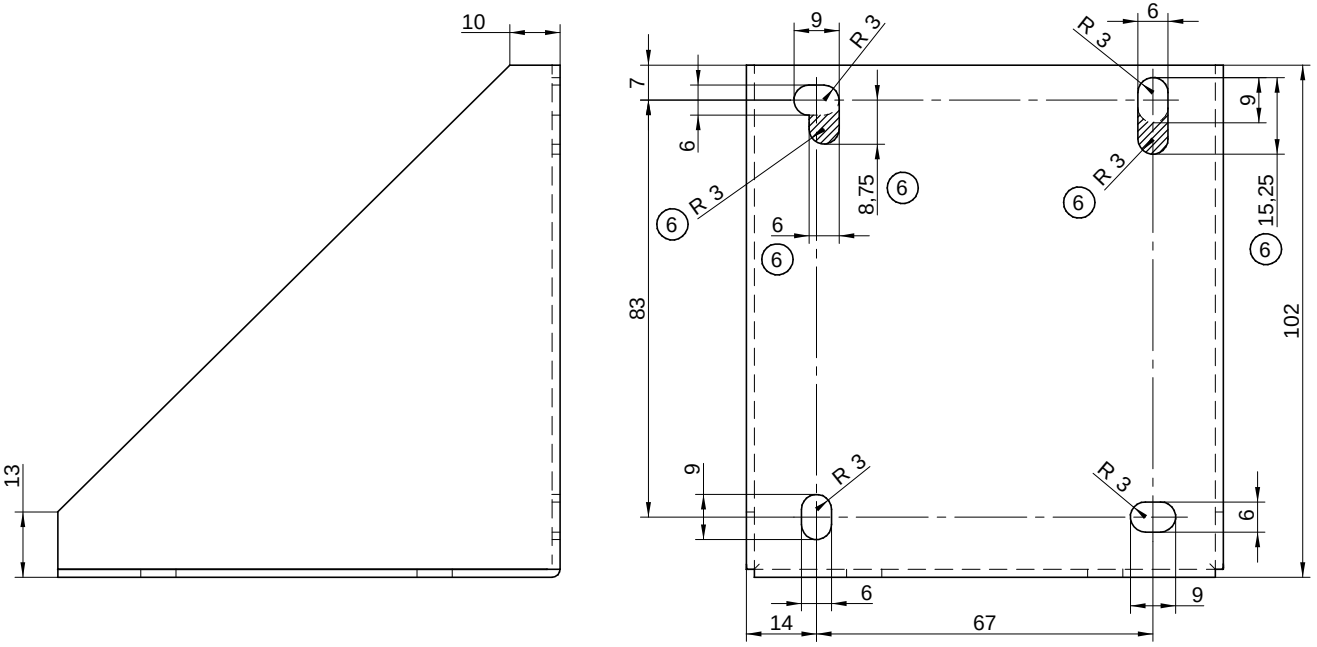

FIRST ISSUE DATE :	4.11.1990

No.	REVISION	DATE
6	Increase size of fixing slots for new Door Release unit. Re-draw on new CAD. Up-Issue to 'B'. T.T.R. No. :115. Change No. : 512.	5.8.99 C.N.A.

40-4003	B	1.6mm Thick M.S.S.	Painted White Gloss	White
PART No.	**Issue**	**MATERIAL**	**FINISH**	**COLOUR**

MODEL : Door Release (FSMD)		PART : Bracket	
DESIGNED	Synchrobell	CHECKED	
DRAWN	Chris Anderson	APPROVED	
Third Angle Projection	All Dimension in Millimetres	SCALE 1:1	Sheet 1 of 1

Fulleon Ltd. Llantarnam Park, Cwmbran,Gwent. NP44 3AW

©