**M12 MALE 90°**

PUR 4X0.34 black UL/CSA, drag ch 5m

Male 90°
M12, 4-pole
with cable sleeves

Plastic housings with good resistance against chemicals and oils. The resistance to aggressive media should be individually tested for your application. Further details on request. Further cable lengths on request.

## Link to Product

**Illustration**

The information in this brochure has been compiled with the utmost care.
Liability for the correctness completeness and topicality of the information is restricted to gross negligence. Version: 01/20

Murrelektronik Ltd. | 5 Albion Street, Pendlebury Industrial Estate, Swinton | Manchester M27 4FG | Fon +44 161 728 3133 | Fax +44 161 728 3130 | shop@murrelektronik.co.uk | shop.murrelektronik.co.uk

stay connected



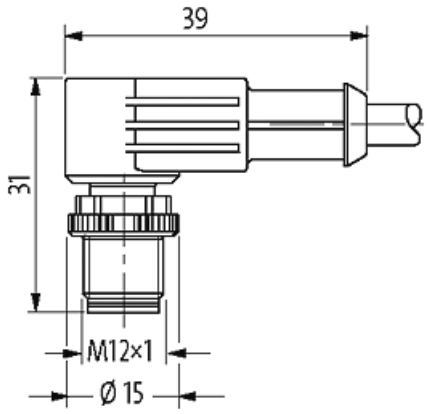


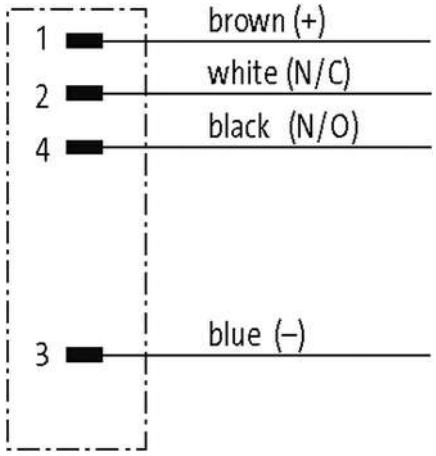


Male

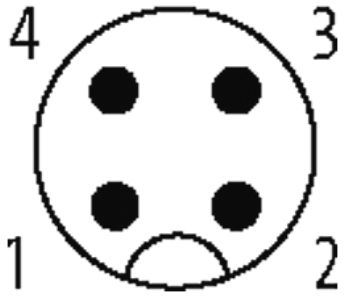


Product may differ from Image

## Approvals

The information in this brochure has been compiled with the utmost care.
Liability for the correctness completeness and topicality of the information is restricted to gross negligence. Version: 01/20

c UL us Listed * | * only for products with UL/CSA approved cable | cCSAus | CE | EAC

| | |
|---|---|
| **Form** | |
| Form | 12101 |
| **Cables** | |
| No./diameter of wires | 4× 0.34 mm² |
| Wire isolation | PP (br, wh, bl, bk) |
| C-track properties | 10 Mio. |
| Material (jacket) | PUR (UL/CSA) |
| Outer Ø | 4.5 mm ±5% |
| Bend radius (moving) | 10× outer Ø |
| Temperature range (fixed) | -40...+80 °C |
| Temperature range (mobile) | -25...+80 °C |
| Cable identification | 634 |
| Cable Type | 3 (PUR) |
| Approval (cable) | cRUus (AWM-Style 20549/10493); CE conform |
| Cable weight [g/m] | 36,30 |
| Material (wire) | Cu wire, bare |
| Resistor (core) | max. 57 Ω/km (20 °C) |
| Single wire Ø (core) | 0.1 mm |
| Construction (core) | 42× 0.1 mm (multi-strand wire class 6) |
| Diameter (core) | 4× 0.34 mm² |
| AWG | similar to AWG 22 |
| Material (wire isolation) | PP |
| Material property (wire isolation) | CFC-, halogen-, cadmium-, silicone- and lead-free |
| Shore hardness (wire isolation) | 70 ±5 D |
| Wire-Ø incl. isolation | 1.25 mm ±5% |
| Color/numbering of wires | br, bk, bl, wh |
| Stranding combination | 4 wires twisted |
| Shield | no |
| Material (jacket) | PUR |
| Material property (jacket) | CFC-, halogen-, cadmium-, silicone- and lead-free, matt, low-adhesion, machine easy to process, abrasion-resistant, hydrolysis and microbial resistant |
| Shore hardness (jacket) | 90 ±5 A |
| Outer-Ø (jacket) | 4.5 mm ±5% |
| Color (jacket) | black |
| chemical resistance | good resistance to oil, gasoline and chemicals (EN 60811-404) |
| thermal resistance | flame retardant UL 1581 VW1 / CSA FT1 / IEC 60332-1, IEC 60332-2-2 |
| Nominal voltage | 300 V AC |
| Test voltage | 2500 V AC |
| Current load capacity | to DIN VDE 0298-4 |
| Temperature range (fixed) | -40...+80 °C, (+90 °C at max. 10 000 operating hours) |
| Temperature range (mobile) | -25...+80 °C, (+90 °C at max. 10 000 operating hours) |
| Bend radius (fixed) | 5× outer Ø |
| Bend radius (moving) | 10× outer Ø |
| No. of bending cycles (C-track) | max. 10 Mio. (25 °C) |
| Travel speed (C-track) | max. 3 m/s |
| Acceleration (C-track) | max. 10 m/s² |

The information in this brochure has been compiled with the utmost care.
Liability for the correctness completeness and topicality of the information is restricted to gross negligence. Version: 01/20

| | |
|---|---|
| Torsion stress | ±180°/m |
| No. of torsion cycles | max. 2 Mio. (25 °C) |
| Torsion speed | 35 cycles/min |
| Jacket Color | black |
| **Technical Data** | |
| Operating voltage | max. 250 V AC/DC |
| Operating voltage (only UL listed) | max. 30 V AC/DC |
| Rated surge voltage | 2.5 kV |
| Operating current per contact | max. 4 A |
| Material group | IEC 60664-1, category I |
| Coding | A-coded |
| Locking of ports | Screw thread (M12×1 mm) recommended torque 0.6 Nm, self-securing |
| Compression gland | M12 (SW13) |
| Protection | IP65, IP66K, IP67 inserted and tightened (EN 60529) |
| Locking material | Zinc die casting, matte nickel plated |
| Material | PUR |
| suitable for corrugated tube (internal Ø) | 10 mm |
| **General data** | |
| Standards | DIN EN 61076-2-101 (M12) |
| Pollution Degree | 3 |
| Temperature range | -25...+85 °C, depending on cable quality |
| **Commercial data** | |
| country of origin | CZ |
| customs tariff number | 85444290 |
| EAN | 4048879215480 |
| eClass | 27279218 |
| Packaging unit | 1 |

The information in this brochure has been compiled with the utmost care.
Liability for the correctness completeness and topicality of the information is restricted to gross negligence. Version: 01/20