Doc. N.° 1SDH000720R0003 - ECN000350420 - Rev. E

# SACE Tmax XT UL

**Istruzioni di installazione XT3 UL**
**Installation instructions XT3 UL**
**Installationsanleitung XT3 UL**
**Instructions pour l'installation XT3 UL**
**Instrucciones de instalación XT3 UL**

XT3 UL 3P-4P

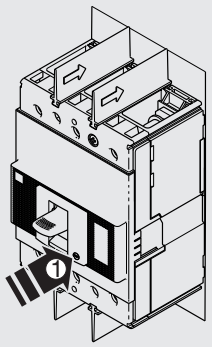

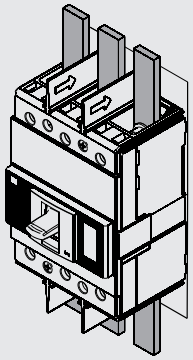

- Usare cavi o barre isolate/ o eseguire prove di tipo specifiche sull' installazione.
- Use cable or insulated busbars/ or performspecific type test on the installation.
- Kabel oder isolierte Sammelschienen verwenden / oderdie spezifische Typprüfung auf derInstallation durchführen.
- Utiliser un câble ou des barres isolées/ ou réaliserun test de type spécifique sur installation.
- Utilizar un cable o barras aisladas / o efectuaruna prueba de tipo específico sobre instalacíon.

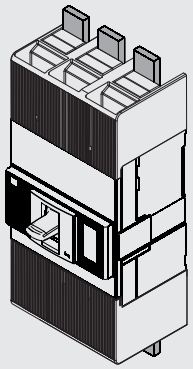

- L'utilizzo di barre non isolate con Ue ⩽ 480V prevede il montaggio obbligatorio di copriterminali HTC.
- The use of not insulated busbars with Ue ⩽ 480V involves the mandatory assembly of terminal-covers HTC.
- Die Benutzung vor Schienen nicht isolierten mit Ue ⩽ 480V sieht Die obligatorisch Montage von Klemmenabdeckung HTC.
- L'utilisation de barres non isolées avec Ue ⩽ 480V prévoit le montage obligatoiredu cache-bornes HTC.
- La utilización de barras no aisladas con Ue ⩽ 480V prevé el montaje obligatorio de cubre-bornes HTC.

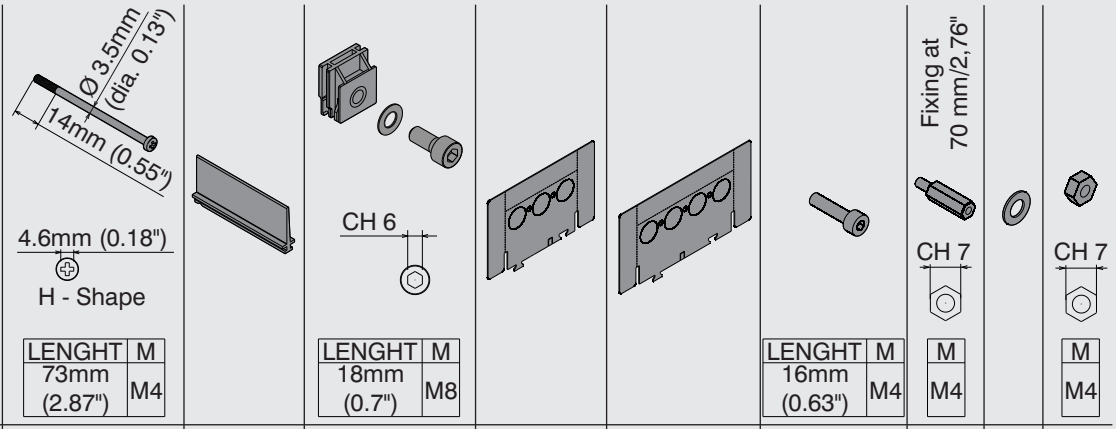


| | | LENGHT 73mm (2.87") M4 | | LENGHT 18mm (0.7") M8 | | | LENGHT 16mm (0.63") M4 | M4 | | M4 |
|---|---|---|---|---|---|---|---|---|---|---|
| F | 3P | 2 | 4 | 6 | 2 | - | - | - | - | - |
| | 4P | 3 | 6 | 8 | - | 2 | - | - | - | - |
| P | 3P | 2 | - | - | - | - | 4 | 4 | 8 | 4 |
| | 4P | 3 | - | - | - | - | 4 | 4 | 8 | 4 |

1

F

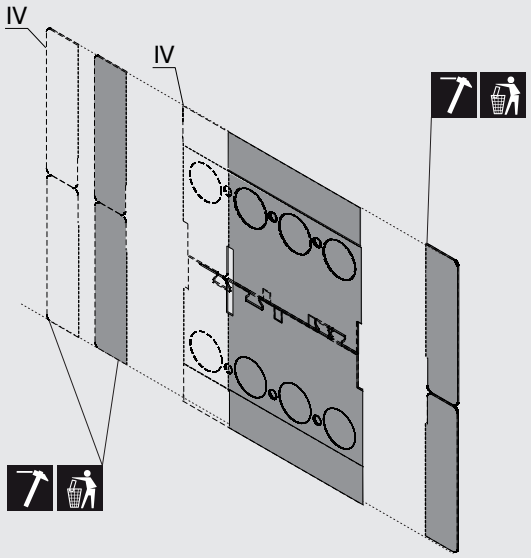


2

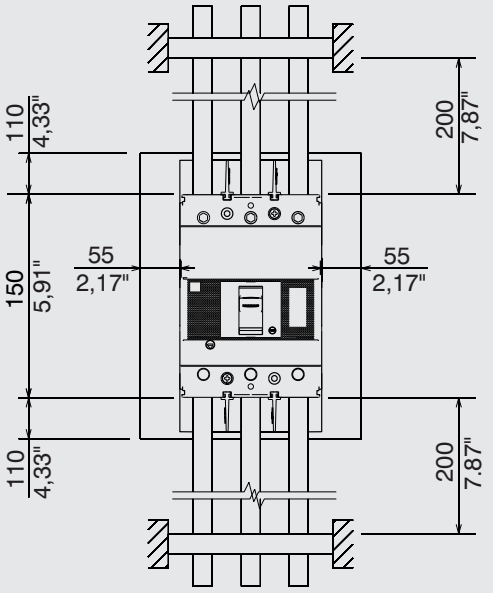


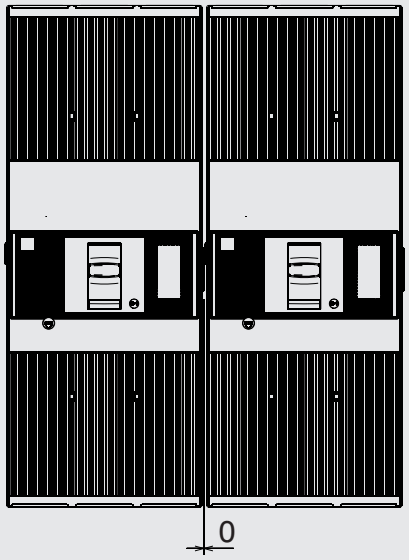


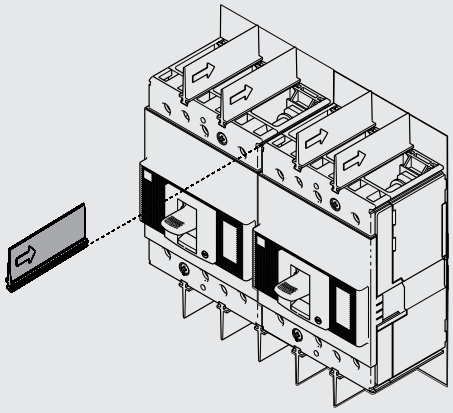

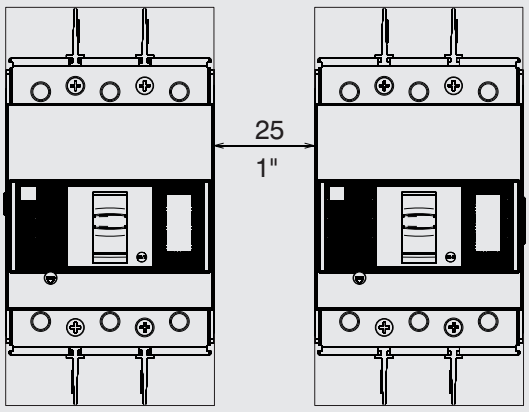

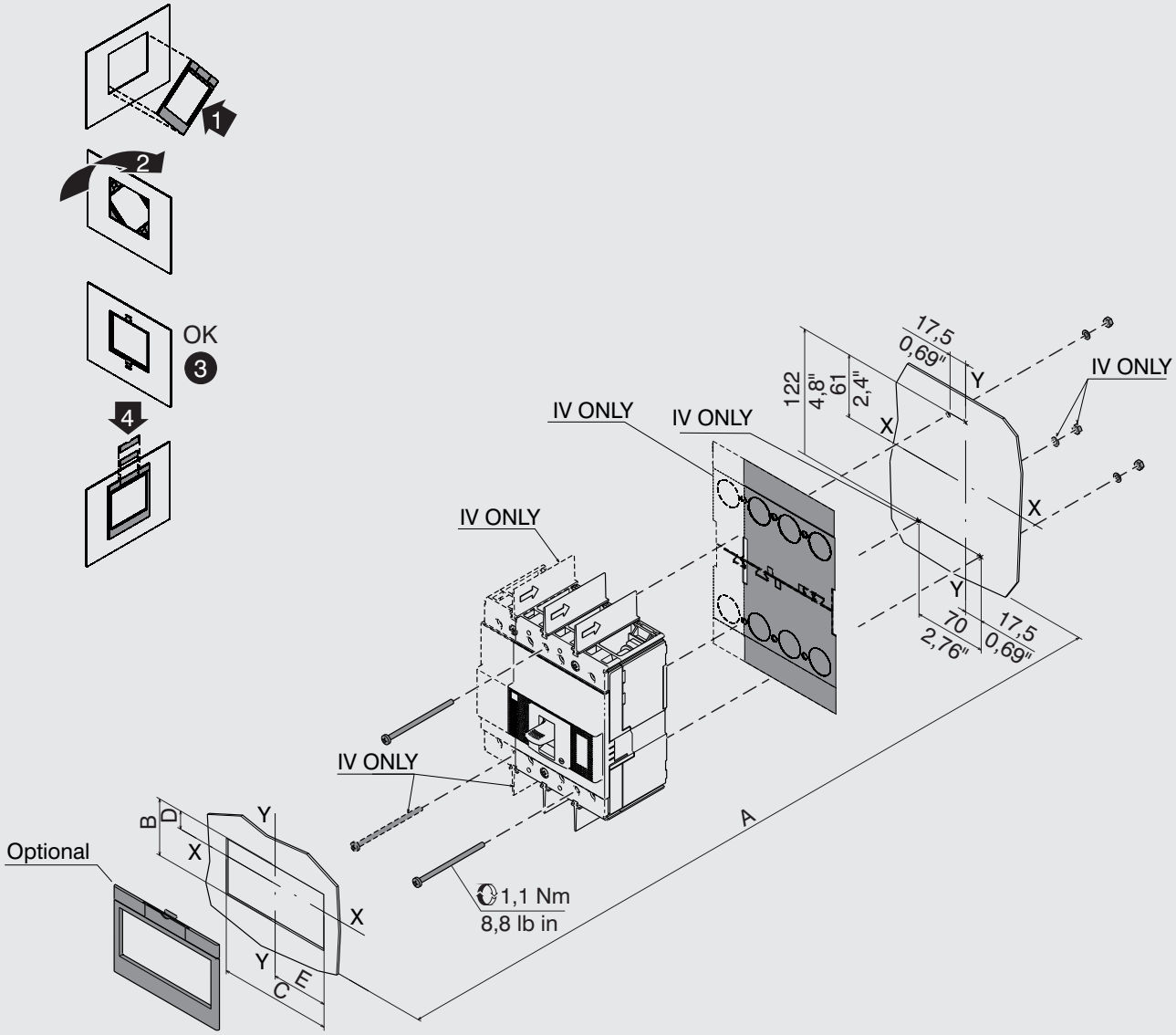


| XT3 WITHOUT FLANGE SENZA MOSTRINA | | A | B | C | D | E |
|---|---|---|---|---|---|---|
| | 3P | 72<br>2,83" | 47<br>1,85" | 102<br>4,02" | 13,5<br>0,53" | 51<br>2" |
| | 4P | 72<br>2,83" | 47<br>1,85" | 137<br>5,39" | 13,5<br>0,53" | 51<br>2" |
| | 3P-4P | 80<br>3,15" | 43<br>1,69" | 47<br>1,85" | 11,5<br>0,45" | 23,5<br>0,93" |

| XT3 WITH FLANGE CON MOSTRINA | | A | B | C | D | E |
|---|---|---|---|---|---|---|
| | 3P | 75<br>2,95" | 55<br>2,16" | 110<br>4,33" | 17,5<br>0,69" | 55<br>2,16" |
| | 4P | 75<br>2,95" | 55<br>2,16" | 145<br>5,71" | 17,5<br>0,69" | 55<br>2,16" |

4 P Fixing at 70mm/2,76"

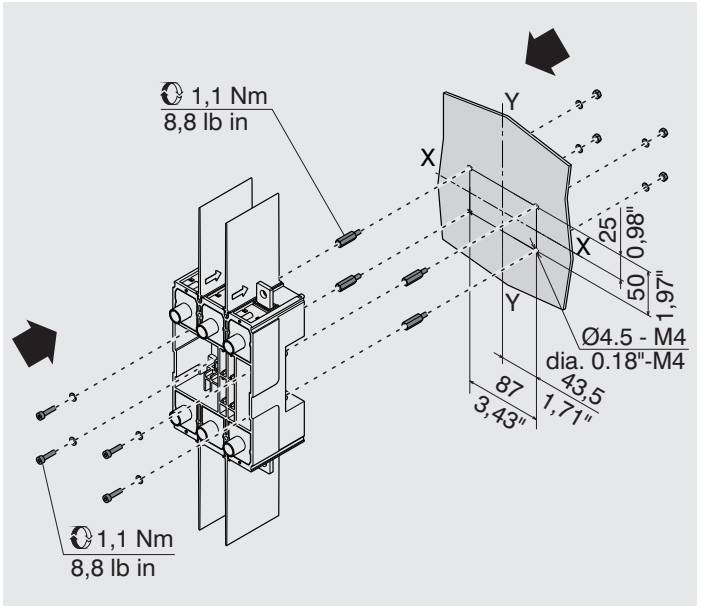


5 P Fixing at 50mm/1,97"

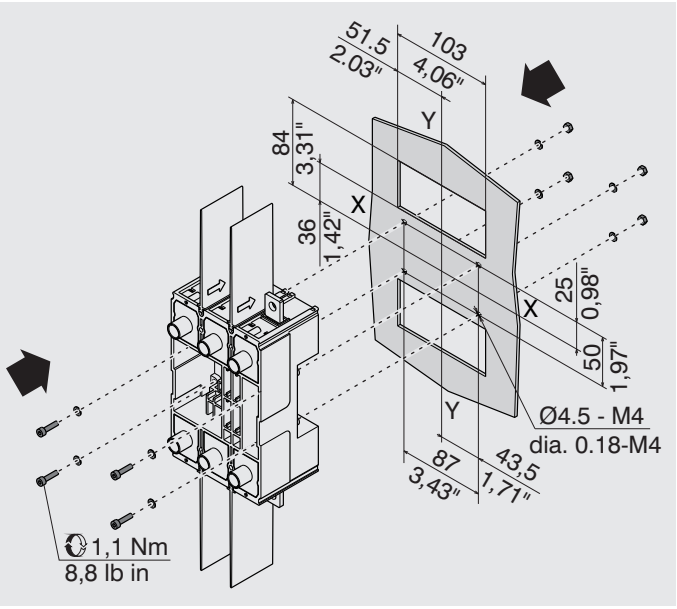


6 P

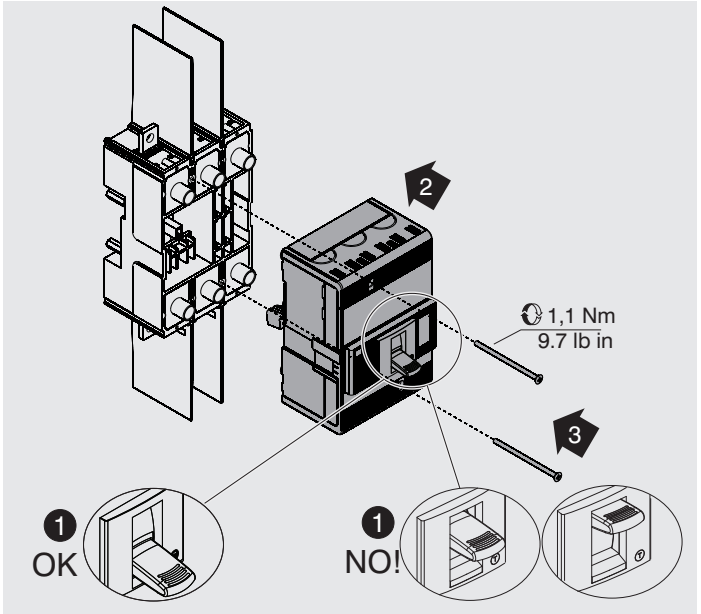


7 P

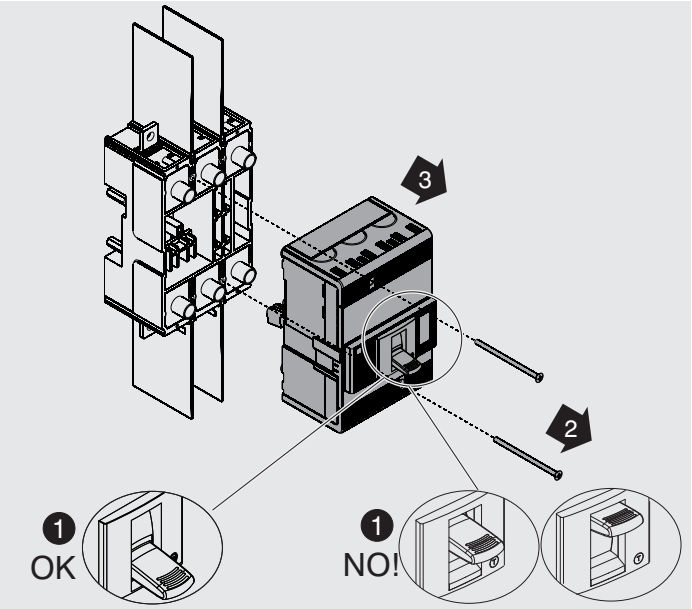


8 P

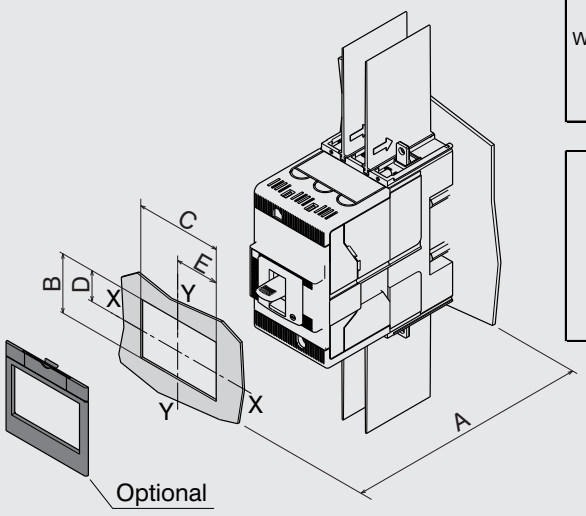


| | | A | | B | C | D | E |
|---|---|---|---|---|---|---|---|
| | | 50/1.97" | 70/2.76" | | | | |
| XT3 WITH FLANGE CON MOSTRINA | 3P | 124<br>4,88" | 144<br>5,67" | 55<br>2,16" | 110<br>4,33" | 17,5<br>0,69" | 55<br>2,16" |
| | 4P | 124<br>4,88" | 144<br>5,67" | 55<br>2,16" | 145<br>5,71" | 17,5<br>0,69" | 55<br>2,16" |

| | | A | | B | C | D | E |
|---|---|---|---|---|---|---|---|
| | | 50/1.97" | 70/2.76" | | | | |
| XT3 WITHOUT FLANGE SENZA MOSTRINA | 3P-4P | 129<br>5,08" | 149<br>5,87" | 43<br>1,69" | 47<br>1,85" | 11,5<br>0,45" | 23,5<br>0,93" |
| | 3P | 121<br>4,76" | 141<br>5,55" | 47<br>1,85" | 102<br>4,02" | 13,5<br>0,53" | 51<br>2,01" |
| | 4P | 121<br>4,76" | 141<br>5,55" | 47<br>1,85" | 137<br>5,4" | 13,5<br>0,53" | 51<br>2,01" |

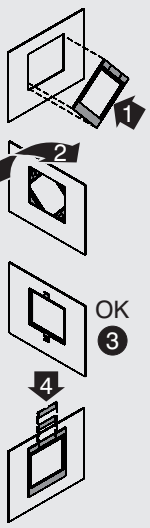

| Terminali<br>Terminals<br>Anschlusse<br>Prises<br>Terminales<br>端子类型 | Codici<br>Codes<br>Codes<br>Codes<br>Códigos<br>物料编号 | Istruzioni d'installazione<br>Installation instructions<br>Installationsanleitung<br>Instructions pour l'installation<br>Instrucciones de instalación<br>安装说明 | Dimensioni di ingombro<br>Overall dimensions<br>Abmessungen<br>Dimensions d'encombrement<br>Dimensiones generales<br>全部尺寸 |
|---|---|---|---|
| **F** | 1SDA066857R1 1/2 Kit - 3p<br>1SDA066858R1 1/2 Kit - 4p | 1SDH000719R0811 | 1SDH000720R0100 |
| **EF** | 1SDA066873R1 1/2 Kit - 3p<br>1SDA066874R1 1/2 Kit - 4p | 1SDH000719R0804 | 1SDH000720R0123 |
| **ES** | 1SDA066897R1 1/2 Kit - 3p<br>1SDA066898R1 1/2 Kit - 4p | 1SDH000719R0805 | 1SDH000720R0101 |
| **FC CuAl<br>14...1/0 AWG** | 1SDA075849R1 1/2 Kit - 3p<br>1SDA075850R1 1/2 Kit - 4p<br>1SDA081990R1 1/2 Kit - 3p AuxV<br>1SDA081991R1 1/2 Kit - 4p Auxv | 1SDH000719R0806 | |
| **FC Cu Al<br>4 AWG...<br>300 Kcmil** | 1SDA075853R1 1/2 Kit - 3p<br>1SDA075854R1 1/2 Kit - 4p<br>1SDA081988R1 1/2 Kit - 3p AuxV<br>1SDA081989R1 1/2 Kit - 4p AuxV | 1SDH000719R0806 | 1SDH000720R0121 |
| **FC Cu<br>10...250 AWG** | 1SDA114853R1 1/2 Kit - 2p<br>1SDA075885R1 1/2 Kit - 3p<br>1SDA075886R1 1/2 Kit - 4p | 1SDH000720R0807 | 1SDH000720R0103 |
| **MC Cu<br>6x12...2 AWG** | 1SDA075905R1 1/2 Kit - 3p<br>1SDA075906R1 1/2 Kit - 4p | 1SDH000719R0808 | 1SDH000720R0103 |
| **R** | 1SDA066945R1 1/2 Kit - 3p<br>1SDA066946R1 1/2 Kit - 4p | 1SDH000719R0809 | 1SDH000720R0104 |
| **R-RC** | 1SDA066954R1 1/2 Kit - 4p | 1SDH000719R0810 | 1SDH000720R0131 |
| **FB** | 1SDA066965R1 1/2 Kit - 3p<br>1SDA066966R1 1/2 Kit - 4p | 1SDH000719R0814 | |

| Terminali<br>Terminals<br>Anschlusse<br>Prises<br>Terminales<br>端子类型 | Codici<br>Codes<br>Codes<br>Codes<br>Códigos<br>物料编号 | Istruzioni d'installazione<br>Installation instructions<br>Installationsanleitung<br>Instructions pour l'installation<br>Instrucciones de instalación<br>安装说明 | Dimensioni di ingombro<br>Overall dimensions<br>Abmessungen<br>Dimensions d'encombrement<br>Dimensiones generales<br>全部尺寸 |
|---|---|---|---|
| **EF** | 1SDA066264R1 1/2 Kit - 3p<br>1SDA066265R1 1/2 Kit - 4p | 1SDH000719R0804 | 1SDH000720R0108 |
| **ES** | 1SDA066897R1 1/2 Kit - 3p<br>1SDA066898R1 1/2 Kit - 4p | 1SDH000719R0805 | 1SDH000720R0105 |
| **FC CuAl<br>14...1/0 AWG** | 1SDA075849R1 1/2 Kit - 3p<br>1SDA075850R1 1/2 Kit - 4p<br>1SDA081990R1 1/2 Kit - 3p AuxV<br>1SDA081991R1 1/2 Kit - 4p Auxv | 1SDH000719R0806 | |
| **FC Cu Al<br>4 AWG...<br>300 Kcmil** | 1SDA075853R1 1/2 Kit - 3p<br>1SDA075854R1 1/2 Kit - 4p<br>1SDA081988R1 1/2 Kit - 3p AuxV<br>1SDA081989R1 1/2 Kit - 4p AuxV | 1SDH000719R0806 | 1SDH000720R0122 |
| **FC Cu<br>10...250 AWG** | 1SDA114853R1 1/2 Kit - 2p<br>1SDA075885R1 1/2 Kit - 3p<br>1SDA075886R1 1/2 Kit - 4p | 1SDH000720R0807 | 1SDH000720R0107 |
| **MC Cu<br>6x12...2 AWG** | 1SDA075905R1 1/2 Kit - 3p<br>1SDA075906R1 1/2 Kit - 4p | 1SDH000719R0808 | 1SDH000720R0107 |
| **HR/VR** | 1SDA066272R1 1/2 Kit - 3p<br>1SDA066273R1 1/2 Kit - 4p | 1SDH000719R0809 | 1SDH000720R0109 |
| **R-RC** | 1SDA066954R1 1/2 Kit - 4p | 1SDH000719R0810 | |
| **FB** | 1SDA066965R1 1/2 Kit - 3p<br>1SDA066966R1 1/2 Kit - 4p | 1SDH000719R0814 | |

11

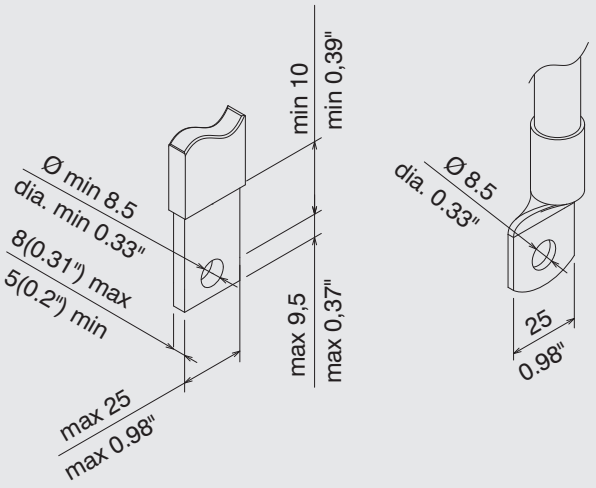


12 MCP

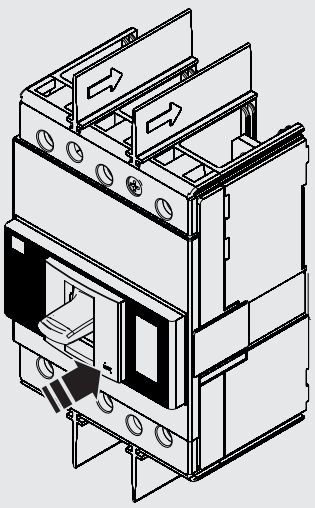

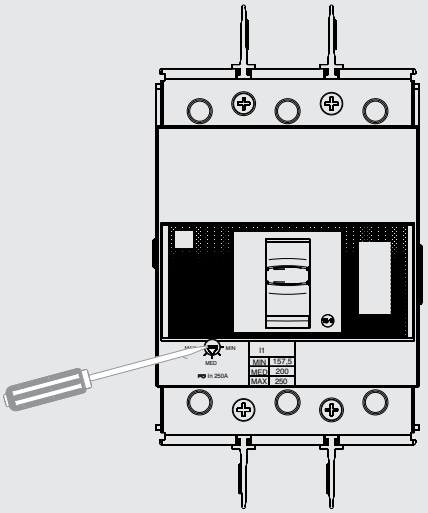

| MCP | | | |
|---|---|---|---|
| MCP reg 6-12 | | | |
| In | min | med | max |
| 100 | 600 | 900 | 1200 |
| 110 | 660 | 990 | 1320 |
| 125 | 750 | 1125 | 1500 |
| 150 | 900 | 1350 | 1800 |
| 200 | 1200 | 1800 | 2400 |

1 2

E'obbligatorio mettere l'interruttore in posizione Trip test prima di regolare il termomagnetico.
It is compulsory to turn the circuit breaker to Trip test mode before adjusting the thermomagnetic release.
Der Leistungsschalter muss vor Einstellung des thermomagnetischen Auslösers zwingend in die Prüfstellung geschaltet werden.
Il est obligatoire de mettre le disjoncteur en position de Test de Déclenchement avant de régler le déclencheur magnétothermique.
Es obligatorio situar el interruptor en posición "Test de Disparo" antes de realizar el ajuste del relé termomagnético.

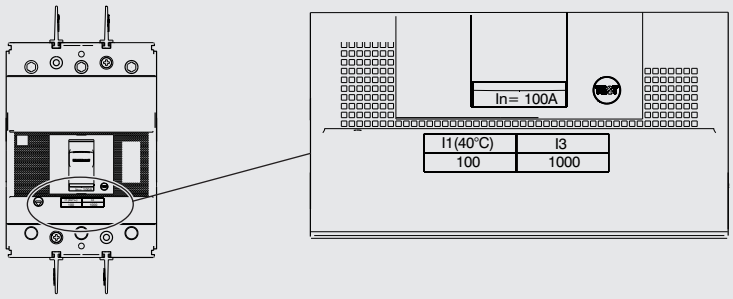


UP TO 250 Vdc

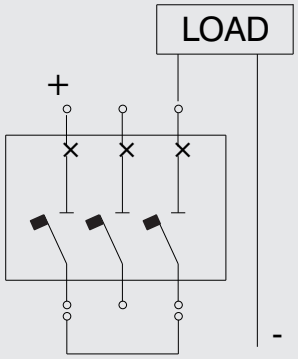


GROUNDED - UNGROUNDED

UP TO 500 Vdc

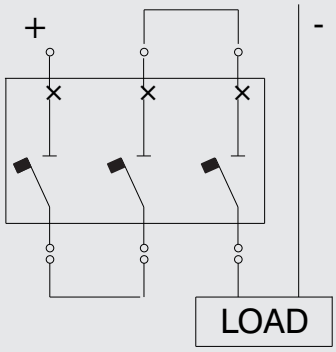


GROUNDED - UNGROUNDED

| | Type | In | I1 | I3 |
|---|---|---|---|---|
| AC | Fixed | 60 | 60 | 600 |
| | | 70 | 70 | 700 |
| | | 80 | 80 | 800 |
| | | 90 | 90 | 900 |
| | | 100 | 100 | 1000 |
| | | 110 | 110 | 1100 |
| | | 125 | 125 | 1250 |
| | | 150 | 150 | 1500 |
| | | 175 | 175 | 1750 |
| | | 200 | 200 | 2000 |
| | | 225 | 225 | 2250 |
| DC* | Fixed | 225 | 225 | 3375 |

* = In < In max, please ask ABB SACE

© Copyright 2014-2024 ABB. All rights reserved.