

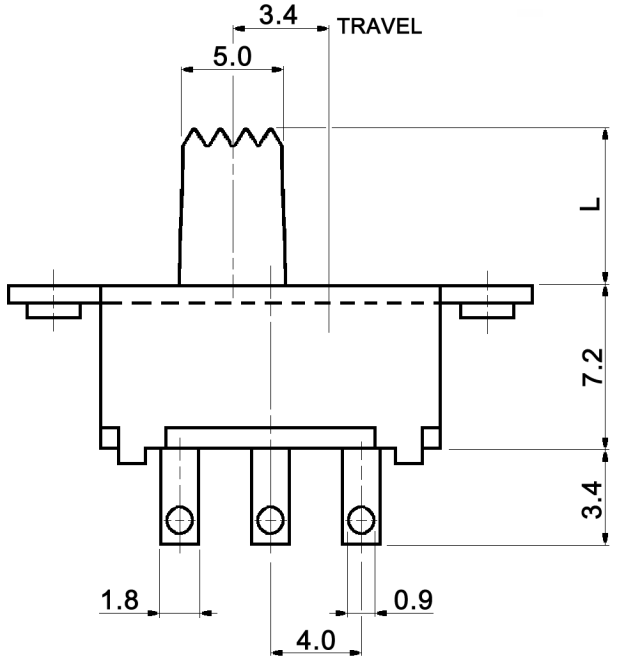

SCHEMATIC

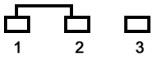

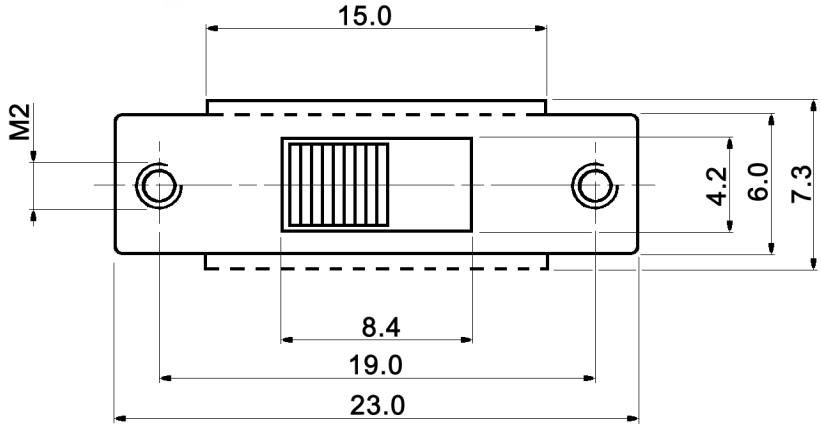

x	L(mm)
2.5	2.5
4	4
5	5
6	6
empty	7
9	9
11	11
12	12
14	14

Specifications:

Contact rating:	350mA, 30V DC
Contact resistance:	20mOhm max.
Insulation resistance:	100MOhm min. at 500V DC
Dielectric strength:	500V, 50Hz for the duration of 1 minute
Operating temperature:	-20°C to +85°C
Mechanical life:	min. 10 000 cycles
Soldering conditions:	hand-soldering: max.: 270°C, 5sec.
Switchting function:	on - on
Timing:	non-shorting
Material:	Contacts: copper alloy, silver plated over nickel barrier Slide colour: black

RoHS-conform 2002/95/EC

Tolerances: ±0.2mm			Date	Name	MFS 131 D-x
			09/10	dr	
			knitter-switch	30 21 66	Page 1/1
Modifications	Date	Name			