Description

- Circular connectors with solder termination
- Highest contact density at small space requirements
- Connector in solder version for easy maintenance



Picture: housing 201060AA

Combination components

Number of the combination	00008945
Housing	R 2.5 type G1 flange housing Cod. N
Insert	R 2.5 female insert, solder 16 pins

General characteristics

Series	ZYLIN R 2.5
Type	G1
Version	Female
Termination method	solder termination
Coding	N
Number of contacts	16
Contact diameter	1 mm
Termination cross section	1 mm²
Mounting type	Counter nut (M20)
Protection degree	IP 67 (mated and locked)
Cycles of mechanical operation	500
Temperature range	-40°C to +100°C, short-term up to +125°C

Electrical characteristics

Rated voltage	24 V AC / 60 V DC
Rated impulse voltage	1.5 kV (according to IEC 60664-1)
Rated current	7.5 A
Contact resistance	< 3 mOhm

Materials and surfaces

Housing, base material	Copper alloy
Housing, surface	Ni
Insulation body, material	Thermoplastic
Insulation body, UL 94 flammability class	V0
Contacts, base materal	Copper alloy
Contacts, surface	Ag
Gaskets	NBR

We reserve all rights according to DIN ISO 16016.

JOST1 / 18.10.2019 / freigegeben

Technical Drawings

Housing

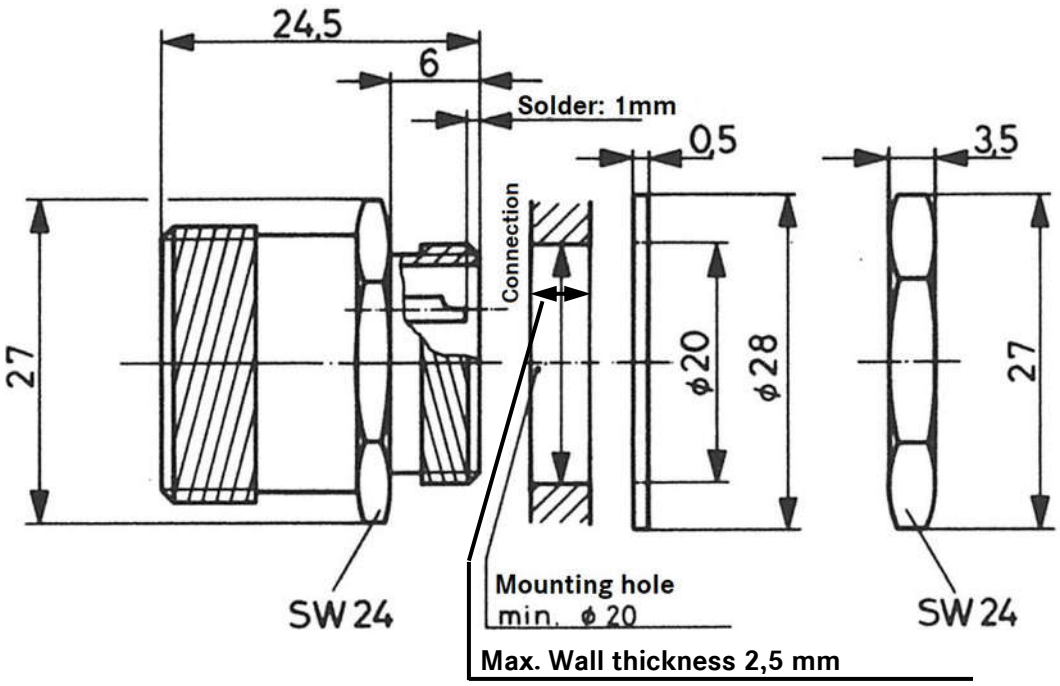

Inserts

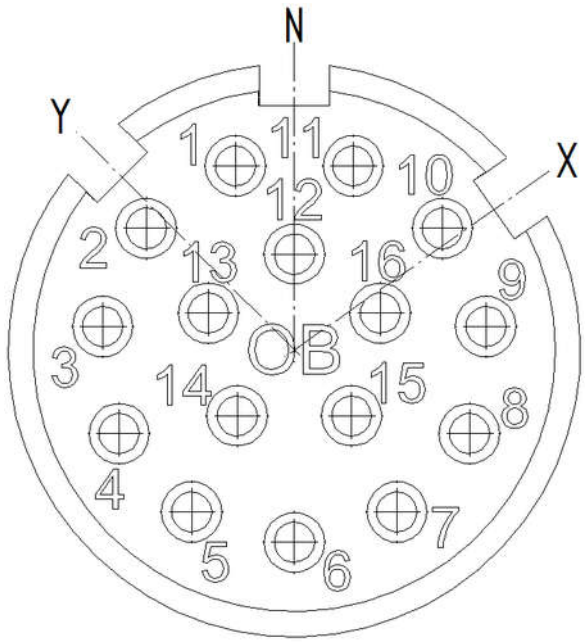

We reserve all rights according to DIN ISO 16016.

JOST1 / 18.10.2019 / freigegeben


Corrosion-resistant


Mechanical and Plant Engineering


Mechanical resistance


Space requirement

Application range

Plant engineering, measurement and control technology, apparatus construction

Remark

Photographs are not to scale and do not represent detailed images of the respective products.

We reserve all rights according to DIN ISO 16016.

JOST1 / 18.10.2019 / freigegeben