SCHMERSAL

EN Operating instructions. . . . . .pages 1 to 6
Original

Content

1 About this document
1.1 Function. 1
1.2 Target group: authorised qualified personnel 1
1.3 Explanation of the symbols used. 1
1.4 Appropriate use. 1
1.5 General safety instructions 1
1.6 Warning about misuse. 2
1.7 Exclusion of liability 2

2 Product description
2.1 Ordering code Protective enclosure IP69 2
2.2 Special versions 2
2.3 Included in delivery 2
2.4 Purpose. 2
2.5 Technical data IP69 (additions). 2
2.6 Dimensions 3
2.6.1 Dimensions, SLC440 transmitter and receiver incl. SH enclosure 3
2.6.2 Dimensions, SLG440 transmitter and receiver incl. SH enclosure 3
2.6.3 Dimensions, SLC440 transmitter and receiver incl. PH enclosure 4
2.6.4 Dimensions, SLG440 transmitter and receiver incl. PH enclosure 4
2.6.5 Dimensions, SLC440COM transmitter and receiver incl. PH enclosure 5
2.6.6 Dimensions, SLG440COM transmitter and receiver incl. PH enclosure 5
2.7 Mounting kits 6

3 Cleaning
3.1 Cleaning 6

4 Disassembly and disposal
4.1 Disassembly 6
4.2 Disposal. 6

5 Appendix
5.1 Contact 6

1. About this document

1.1 Function

This operating instructions manual provides all the information you need for the mounting, set-up and commissioning to ensure the safe operation and disassembly of the safety switchgear. The operating instructions must be available in a legible condition and a complete version in the vicinity of the device.

In addition, the superior operating instructions for active optoelectronic safety devices (AOPD) also apply.

Note the explanations in the operating instructions relating to safety light curtains, in particular:
- Appropriate use
- General safety instructions
- Warning about misuse

1.2 Target group: authorised qualified personnel

All operations described in this operating instructions manual must be carried out by trained specialist personnel, authorised by the plant operator only.

Please make sure that you have read and understood these operating instructions and that you know all applicable legislations regarding occupational safety and accident prevention prior to installation and putting the component into operation.

The machine builder must carefully select the harmonised standards to be complied with as well as other technical specifications for the selection, mounting and integration of the components.

1.3 Explanation of the symbols used

Information, hint, note:
This symbol is used for identifying useful additional information.

Caution: Failure to comply with this warning notice could lead to failures or malfunctions.
Warning: Failure to comply with this warning notice could lead to physical injury and/or damage to the machine.

1.4 Appropriate use

The products described in these operating instructions are developed to execute safety-related functions as part of an entire plant or machine. It is the responsibility of the manufacturer of a machine or plant to ensure the correct functionality of the entire machine or plant.

The safety switchgear must be exclusively used in accordance with the versions listed below or for the applications authorised by the manufacturer. Detailed information regarding the range of applications can be found in the chapter "Product description".

1.5 General safety instructions

The user must observe the safety instructions in this operating instructions manual, the country specific installation standards as well as all prevailing safety regulations and accident prevention rules.

x.000 / 01.2020 / v.A. - 103027771-EN / C / 2020-01-21 / AE-Nr. 11732

Further technical information can be found in the Schmersal catalogues or in the online catalogue on the Internet: www.schmersal.net.

The information contained in this operating instructions manual is provided without liability and is subject to technical modifications.

The entire concept of the control system, in which the safety component is integrated, must be validated to EN ISO 13849-2.

There are no residual risks, provided that the safety instructions as well as the instructions regarding mounting, commissioning, operation and maintenance are observed.

Additional measures could be required to ensure that the AOPD does not present a dangerous breakdown, when other forms of light beams are available in a special application (e.g. use of wireless control devices on cranes, radiation of welding sparks or effects of stroboscopic lights).

1.6 Warning about misuse

In case of improper use or manipulation of the safety switchgear, personal hazards or damages to machinery or plant components cannot be excluded. The relevant requirements of the standard EN ISO 13855 must be observed.

Only if the information described in this operating instructions manual are realised correctly, the safety function and therefore the compliance with the Machinery Directive is maintained.

1.7 Exclusion of liability

We shall accept no liability for damages and malfunctions resulting from defective mounting or failure to comply with this operating instructions manual. The manufacturer shall accept no liability for damages resulting from the use of unauthorised spare parts or accessories.

For safety reasons, invasive work on the device as well as arbitrary repairs, conversions and modifications to the device are strictly forbidden; the manufacturer shall accept no liability for damages resulting from such invasive work, arbitrary repairs, conversions and/or modifications to the device.

2. Product description

2.1 Ordering code Protective enclosure IP69

This operating instructions manual applies to the following types:

①-②-**ER**-③

No.	Option	Description
①	SH	Protective enclosure with stainless steel enclosure caps
	PH	Protective enclosure with polyamide enclosure caps
②	440	Series SLC/SLG440
	COM4	Series SLC/SLG440COM (PH protective enclosure only)
③	01	Protection field height 170…490 mm*
	02	Protection field height 500…890 mm
	03	Protection field height 900…1290 mm
	04	Protection field height 1370…1770 mm

* Protection field heights 170 and 250 mm on SLC440 only

2.2 Special versions

For special versions, which are not listed in the order code below 2.1, these specifications apply accordingly, provided that they correspond to the standard version.

2.3 Included in delivery

- Protective enclosure for transmitter and receiver
- Mounting kit (pre-mounted)
- Connection cable with 10 m length mounted to transmitter and receiver
- Operating instructions DE/EN
- Screw set with external hex MS-SH-400 (SH version only)

2.4 Purpose

The SLC/SLG is a non-contact, self-testing safety guard (AOPD), which is used for the protection of hazardous points, hazardous areas and machine accesses. If one or more light beams are interrupted, the hazardous movement must be stopped.

The user must evaluate and design the safety chain in accordance with the relevant standards and the required safety level.

The AOPD is equipped with a membrane, as such the AOPD must always be fitted with the cable outlet downwards. This is the only way to guarantee the functionality of the membrane.

2.5 Technical data IP69 (additions)

The same technical data apply to the AOPD versions with protective enclosure as outlined in the AOPD operating instructions, with the exception of the following:

Material of the enclosure:	
- Protective tube:	Polycarbonate plastic tubes
- Enclosure caps:	SH: SS 316
	PH: PA6
- Membrane:	SH: SS 316, Gore Tex membrane M12 x 1.5
	PH: SS 316, Gore Tex membrane M12 x 1.5
Protection field heights:	
- SLC/SLG440:	170 mm … 1770 mm
- SLC/SLG440COM:	330 mm … 1770 mm
- SLG440/SLG440COM:	500 mm, 800 mm, 900 mm
Termination:	M12 cable gland
	with cable, length 10 m
- SLC/SLG440:	Transmitter: M12, 4-pin cable connector
	Receiver: M12, 8-pin cable connector
- SLC/SLG440COM:	Transmitter: M12, 4-pin cable connector
	Receiver: M12, 5-pin cable connector
Ambient temperature:	
- SLC/SLG440:	–25 °C … +50 °C
- SLC/SLG440COM:	–10 °C … +50 °C
Protection class:	IP69

2.6 Dimensions

2.6.1 Dimensions, SLC440 transmitter and receiver incl. SH enclosure

All measurements in mm.

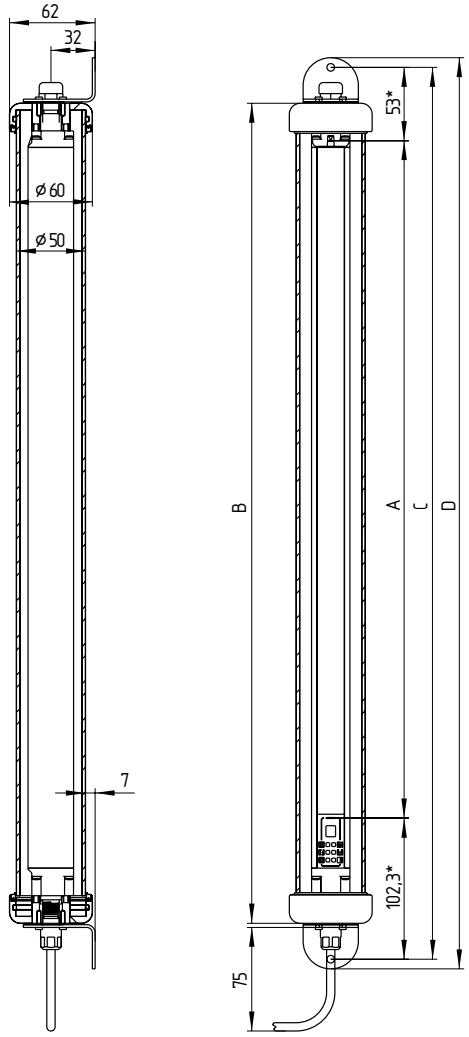

Type Dimensions = SLC with SH protective enclosure	A Protected height	B Sensor length	C Mounting dimension	D Total length	E Weight
SLC440-ER-0170-xx-01	170	275	328	342	2.7
SLC440-ER-0250-xx-01	250	355	408	422	2.9
SLC440-ER-0330-xx-01	330	435	488	502	3.1
SLC440-ER-0410-xx-01	410	515	568	582	3.4
SLC440-ER-0490-xx-01	490	595	648	662	3.6
SLC440-ER-0570-xx-01	570	675	728	742	3.8
SLC440-ER-0650-xx-01	650	755	808	822	4.0
SLC440-ER-0730-xx-01	730	835	888	902	4.2
SLC440-ER-0810-xx-01	810	915	968	982	4.4
SLC440-ER-0890-xx-01	890	995	1048	1062	4.6
SLC440-ER-0970-xx-01	970	1075	1128	1142	4.9
SLC440-ER-1050-xx-01	1050	1155	1208	1222	5.1
SLC440-ER-1130-xx-01	1130	1235	1288	1302	5.3
SLC440-ER-1210-xx-01	1210	1315	1368	1382	5.5
SLC440-ER-1290-xx-01	1290	1395	1448	1462	5.7
SLC440-ER-1370-xx-01	1370	1475	1528	1542	5.9
SLC440-ER-1450-xx-01	1450	1555	1608	1622	6.2
SLC440-ER-1530-xx-01	1530	1635	1688	1702	6.4
SLC440-ER-1610-xx-01	1610	1715	1768	1782	6.6
SLC440-ER-1690-xx-01	1690	1795	1848	1862	6.8
SLC440-ER-1770-xx-01	1770	1875	1928	1942	7.0

2.6.2 Dimensions, SLG440 transmitter and receiver incl. SH enclosure

All measurements in mm.

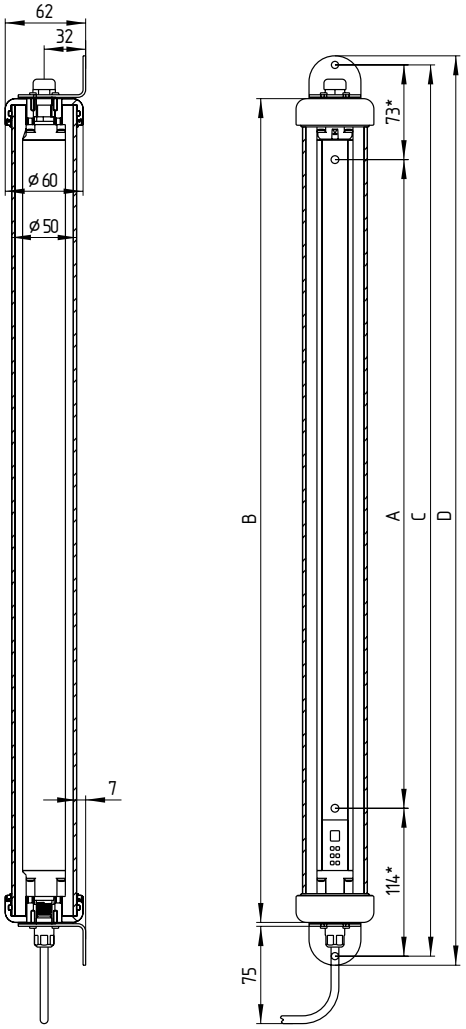

Type Dimensions = SLG with SH protective enclosure	A Protected height	B Sensor length	C Mounting dimension	D Total length	E Weight
SLG440-ER-0500-02-01	500	635	688	702	3.6
SLG440-ER-0800-03-01	800	935	988	1002	4.4
SLG440-ER-0900-04-01	900	1035	1088	1102	4.7

To each SLC/SLG you need to order the associated protective housing (see 2.1 Ordering code).

When using the mounting kit MS-PH-SH, dimension C is reduced by 10 mm.

* When using the mounting kit MS-PH-SH, the specified dimension is reduced by 5 mm.

2.6.3 Dimensions, SLC440 transmitter and receiver incl. PH enclosure

All measurements in mm.

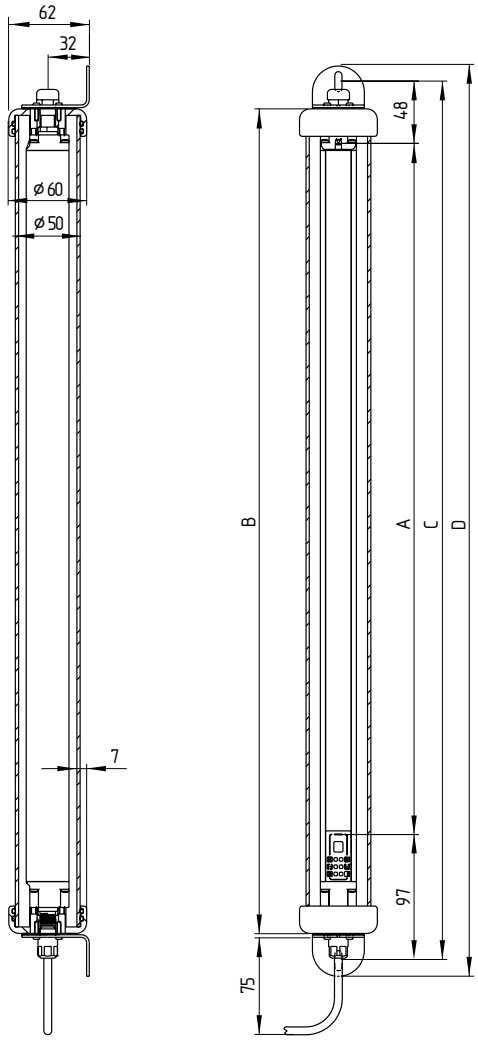

Type Dimensions = SLC with PH protective enclosure	A Protected height	B Sensor length	C Mounting dimension	D Total length	E Weight
SLC440-ER-0170-xx-01	170	275	316	340	2.0
SLC440-ER-0250-xx-01	250	355	396	420	2.2
SLC440-ER-0330-xx-01	330	435	476	500	2.4
SLC440-ER-0410-xx-01	410	515	556	580	2.6
SLC440-ER-0490-xx-01	490	595	636	660	2.8
SLC440-ER-0570-xx-01	570	675	716	740	3.1
SLC440-ER-0650-xx-01	650	755	796	820	3.3
SLC440-ER-0730-xx-01	730	835	876	900	3.5
SLC440-ER-0810-xx-01	810	915	956	980	3.7
SLC440-ER-0890-xx-01	890	995	1036	1060	3.9
SLC440-ER-0970-xx-01	970	1075	1116	1140	4.1
SLC440-ER-1050-xx-01	1050	1155	1196	1220	4.3
SLC440-ER-1130-xx-01	1130	1235	1276	1300	4.6
SLC440-ER-1210-xx-01	1210	1315	1356	1380	4.8
SLC440-ER-1290-xx-01	1290	1395	1436	1460	5.0
SLC440-ER-1370-xx-01	1370	1475	1516	1540	5.2
SLC440-ER-1450-xx-01	1450	1555	1596	1620	5.4
SLC440-ER-1530-xx-01	1530	1635	1676	1700	5.6
SLC440-ER-1610-xx-01	1610	1715	1756	1780	5.8
SLC440-ER-1690-xx-01	1690	1795	1836	1860	6.1
SLC440-ER-1770-xx-01	1770	1875	1916	1940	6.3

2.6.4 Dimensions, SLG440 transmitter and receiver incl. PH enclosure

All measurements in mm.

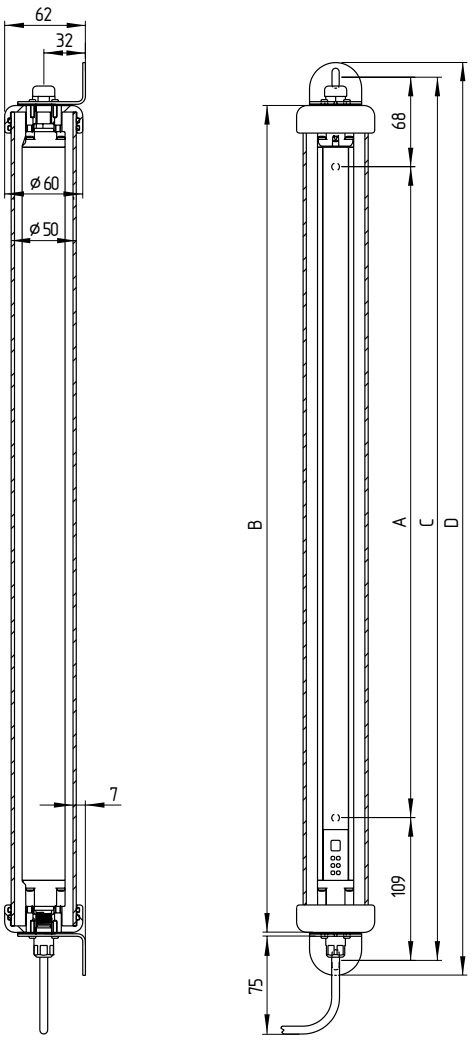

Type Dimensions = SLG with PH protective enclosure	A Protected height	B Sensor length	C Mounting dimension	D Total length	E Weight
SLG440-ER-0500-02-01	500	635	676	700	2.9
SLG440-ER-0800-03-01	800	935	976	1000	3.7
SLG440-ER-0900-04-01	900	1035	1076	1100	3.9

To each SLC/SLG you need to order the associated protective housing (see 2.1 Ordering code).

2.6.5 Dimensions, SLC440COM transmitter and receiver incl. PH enclosure

All measurements in mm.

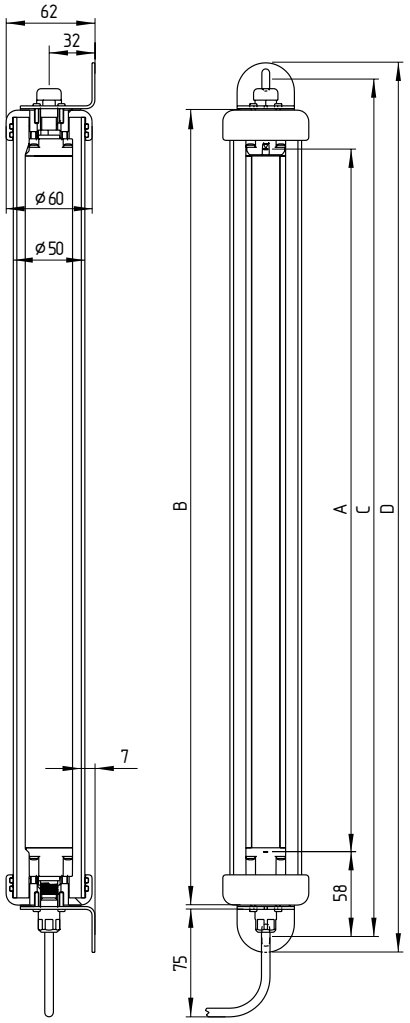

Type Dimensions = SLC440COM with PH protective enclosure	A Protected height	B Sensor length	C Mounting dimension	D Total length	E Weight
SLC440COM-ER-0330-xx	330	395	436	460	2.2
SLC440COM-ER-0410-xx	410	475	516	540	2.4
SLC440COM-ER-0490-xx	490	555	596	620	2.6
SLC440COM-ER-0570-xx	570	635	676	700	2.9
SLC440COM-ER-0650-xx	650	715	756	780	3.1
SLC440COM-ER-0730-xx	730	795	836	860	3.3
SLC440COM-ER-0810-xx	810	875	916	940	3.5
SLC440COM-ER-0890-xx	890	955	996	1020	3.7
SLC440COM-ER-0970-xx	970	1035	1076	1100	3.9
SLC440COM-ER-1050-xx	1050	1115	1156	1180	4.1
SLC440COM-ER-1130-xx	1130	1195	1236	1260	4.3
SLC440COM-ER-1210-xx	1210	1275	1316	1340	4.5
SLC440COM-ER-1290-xx	1290	1355	1396	1420	4.7
SLC440COM-ER-1370-xx	1370	1435	1476	1500	4.9
SLC440COM-ER-1450-xx	1450	1515	1556	1580	5.2
SLC440COM-ER-1530-xx	1530	1595	1636	1660	5.4
SLC440COM-ER-1610-xx	1610	1675	1716	1740	5.6
SLC440COM-ER-1690-xx	1690	1755	1796	1820	5.8
SLC440COM-ER-1770-xx	1770	1835	1876	1900	6.0

2.6.6 Dimensions, SLG440COM transmitter and receiver incl. PH enclosure

All measurements in mm.

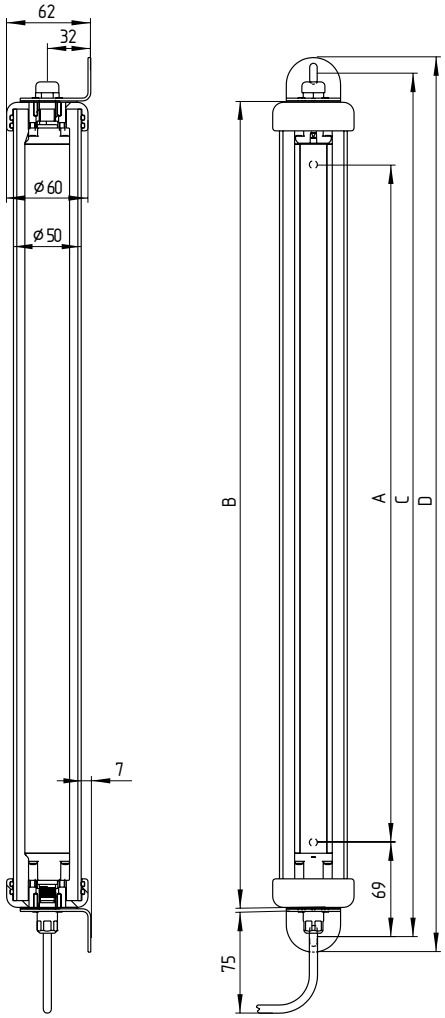

Type Dimensions = SLG440COM with PH protective enclosure	A Protected height	B Sensor length	C Mounting dimension	D Total length	E Weight
SLG440COM-ER-0500-02	500	595	636	660	2.6
SLG440COM-ER-0800-03	800	895	936	960	3.5
SLG440COM-ER-0900-04	900	995	1036	1060	3.7

To each SLC/SLG you need to order the associated protective housing (see 2.1 Ordering code).

2.7 Mounting kits

Mounting kit MS-SH
The mounting kit for the SH enclosure consists of 4 pcs SS 316 stainless steel brackets and 16 pcs SS 316 internal hex screws and is premounted to the enclosure caps.

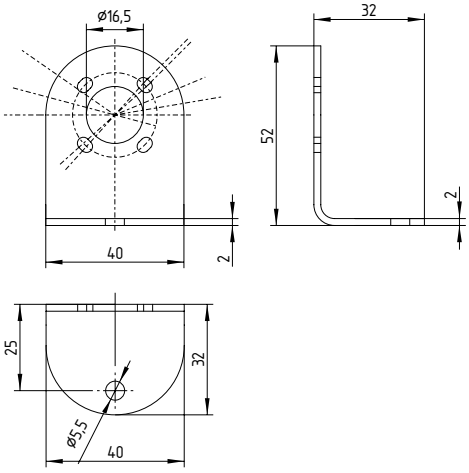

Screw set with external hex MS-SH-440
(included in delivery with SH version only)
The mounting kit consists of 16 pcs SS 316 hex screws incl. shim plates and 1 pc 5.5 mm wrench.

Mounting kit MS-PH-SH
The mounting kit for the PH enclosure consists of 4 pcs SS 316 stainless steel brackets and 16 pcs SS 316 internal hex screws and is premounted to the enclosure caps.

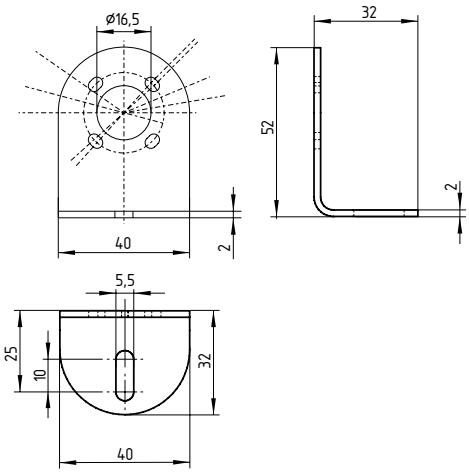

The mounting kit MS-PH-SH may optionally be used for the SH enclosure. In this case, only the 4 pcs SS 316 stainless steel brackets are included in the delivery.

3. Cleaning

3.1 Cleaning
If the optics cover of the sensors is extremely soiled, the OSSD outputs may be disabled. Clean with a clean, soft cloth with low pressure.
The use of agressive, abrasive or scratching cleaning agents, which could attack the surface, is prohibited.

4. Disassembly and disposal

4.1 Disassembly
The safety switchgear must be disassembled in a de-energised condition only.

4.2 Disposal
The safety switchgear must be disposed of in an appropriate manner in accordance with the national prescriptions and legislations.

5. Appendix

5.1 Contact
Consultancy / Sales:
K.A. Schmersal GmbH & Co. KG
Möddinghofe 30
42279 Wuppertal
Deutschland
Phone: +49 202 6474-0
Telefax: +49 202 6474-100

You will also find detailed information regarding our product variety on our website: www.schmersal.com.

Repair/shipping:
Safety Control GmbH
Am Industriepark 2a
84453 Mühldorf / Inn
Deutschland
Phone: +49 8631 18796-0
Telefax: +49 8631 18796-1

K.A. Schmersal GmbH & Co. KG
Möddinghofe 30, 42279 Wuppertal
Germany
Phone: +49 202 6474-0
Telefax: +49 202 6474-100
E-Mail: info@schmersal.com
Internet: www.schmersal.com