E21064

Reflector for retro-reflective sensors

REFLECTOR TS-50X50/110°C

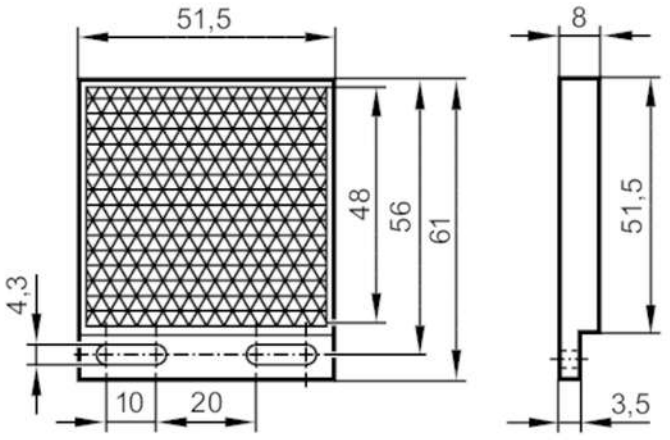

Application		
Design		rectangular, for red light and infrared light retro-reflective sensors
Operating conditions		
Ambient temperature	[°C]	-10...110
Mechanical data		
Weight	[g]	16.4
Dimensions	[mm]	61 x 51.5 x 8
Reflector surface	[mm]	48 x 48
Materials		plastics
Remarks		
Pack quantity		1 pcs.