MK5362

Cylinder sensor with GMR cell

MKC2028BARKG/G/0.3M/ZH/AS

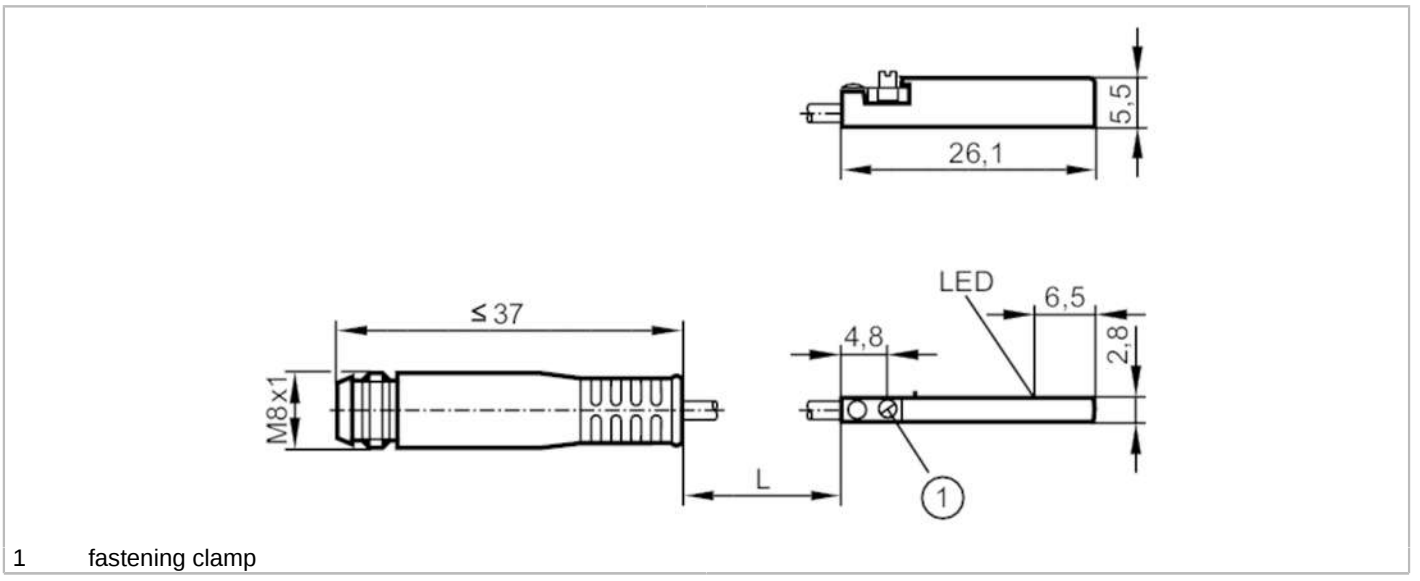

1 fastening clamp

Product characteristics		
Electrical design		PNP/NPN
Output function		normally open
Dimensions	[mm]	26.1 x 2.8 x 5.5
Electrical data		
Operating voltage	[V]	10...30 DC
Current consumption	[mA]	< 10
Protection class		III
Reverse polarity protection		yes
Max. power-on delay time	[ms]	30
Outputs		
Electrical design		PNP/NPN
Output function		normally open
Max. voltage drop switching output DC	[V]	4.5
Minimum load current	[mA]	5
Max. leakage current	[mA]	0.8
Permanent current rating of switching output DC	[mA]	100
Switching frequency DC	[Hz]	4000
Short-circuit protection		yes
Overload protection		yes
Detection zone		
Response sensitivity	[mT]	2.8
Travel speed	[m/s]	> 10
Accuracy / deviations		
Hysteresis	[mm]	< 0.12
Repeatability	[mm]	< 0.2

MK5362

Cylinder sensor with GMR cell

MKC2028BARKG/G/0.3M/ZH/AS

Operating conditions			
Ambient temperature	[°C]	-25...85	
Protection		IP 65; IP 67	
Tests / approvals			
EMC		EN 61000-4-2 ESD	- CD / 8 kV AD
		EN 61000-4-3 HF radiated	10 V/m
		EN 61000-4-4 Burst	2 kV
		EN 61000-4-6 HF conducted	10 V
		EN 55011	class B
Vibration resistance		EN 60947-5-2	
Shock resistance		EN 60947-5-2	
Mechanical data			
Weight	[g]	9.8	
Mounting		flush mountable	
Cylinder type		C-slot cylinders	
Dimensions	[mm]	26.1 x 2.8 x 5.5	
Materials		housing: PA; fastening clamp: stainless steel	
Displays / operating elements			
Display		switching status	1 x LED, yellow
Remarks			
Pack quantity		1 pcs.	

Electrical connection - plug

Cable: 0.3 m, PUR

Connector: 1 x M8; coding: A; Locking: snap-fit



Connection

