WIRING DIAGRAM

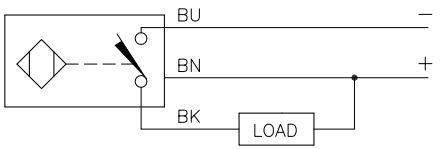

OUTPUT: AN6X

SHORT–CIRCUIT AND OVERLOAD PROTECTED

SPECIFICATIONS

OPERATING VOLTAGE	10–30 VDC
RIPPLE	≤10%
DIFFERENTIAL TRAVEL (HYSTERESIS)	3–15% (5% TYPICAL)
VOLTAGE DROP ACROSS CONDUCTING SENSOR	≤1.8 V at 100 mA
OUTPUT FUNCTION	NORMALLY OPEN 3–WIRE DC SELF–CONTAINED
TTL COMPATIBLE	NO
TRIGGER CURRENT FOR OVERLOAD PROTECTION	≥220 mA
CONTINUOUS LOAD CURRENT	≤200 mA
OFF–STATE (LEAKAGE) CURRENT	<10μ A
NO–LOAD CURRENT	≤15 mA
TIME DELAY BEFORE AVAILABILITY	≤8 ms
POWER–ON EFFECT PROTECTION	INCORPORATED
REVERSE POLARITY PROTECTION	INCORPORATED
WIRE–BREAK PROTECTION	INCORPORATED
PROTECTION AGAINST TRANSIENTS	2 kV, 1 ms, 1 kΩ
OPERATING TEMPERATURE	–25°C to +70°C (–13°F to +158°F)
ENCLOSURE	MEETS NEMA 1, 3, 4, 6, 13 AND IEC IP67
SHOCK	30 g, 11 ms
VIBRATION	55 Hz, 1 mm AMPLITUDE (IN ALL 3 PLANES)
LED FUNCTION	YELLOW: OUTPUT ENERGIZED GREEN: POWER ON
SENSING RANGE	3 mm = .118" (NOMINAL)
SWITCHING FREQUENCY	1000 Hz
REPEATABILITY	≤2% of RATED OPERATING DISTANCE
EMBEDDABLE (SHIELDED)	YES

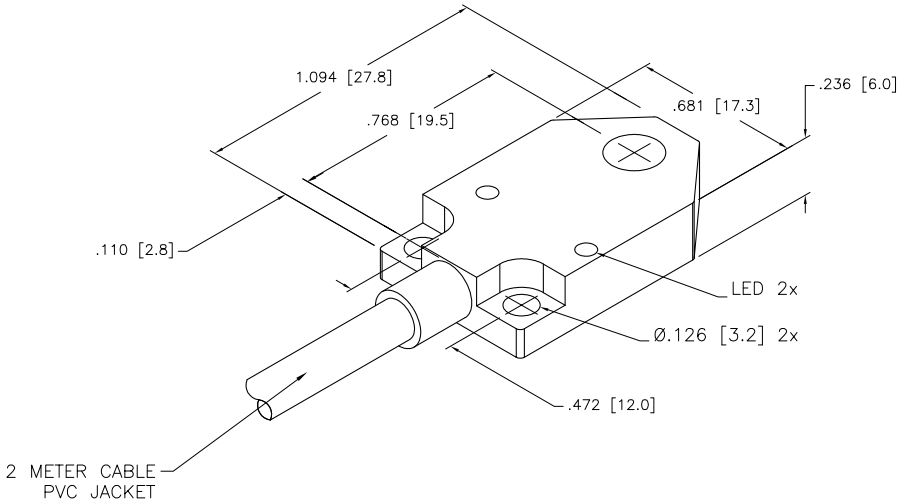

REV	DESCRIPTION	BY	DATE	ECO NO.
D	UPDATE SENSOR DIMS	RDS	06/02/08	21632

RELATED DOCUMENTS
1.
2.
3.
4.

3RD ANGLE PROJECTION

THIS DRAWING IS PROPERTY OF TURCK INC. USE OF THIS DOCUMENT WITHOUT WRITTEN PERMISSION IS PROHIBITED.

TURCK INC
High Technology Sensors and Automation Controls
3000 CAMPUS DRIVE
MINNEAPOLIS, MN 55441
1–800–544–7769
(763) 553–7300
(763) 553–0708 fax
turck.com

MATERIAL: PA 12–GF30 PLASTIC

FINISH

ALL DIMENSIONS DISPLAYED ON THIS DRAWING ARE FOR REFERENCE ONLY

CONTACT TURCK FOR MORE INFORMATION

DRFT: SWC | DATE: 8/11/93
DSGN | SCALE: 1=.7

UNIT OF MEASUREMENT
INCH [MILLIMETER]
DO NOT SCALE THIS DRAWING

DESCRIPTION: Bi3–Q06–AN6X2

IDENTIFICATION NO.: S1620150 | REV: D

FILE: S1620150 | SHEET 1 OF 1