efector400

RO3500

INCREMENTAL ENCODER BASIC LINE

Encoders

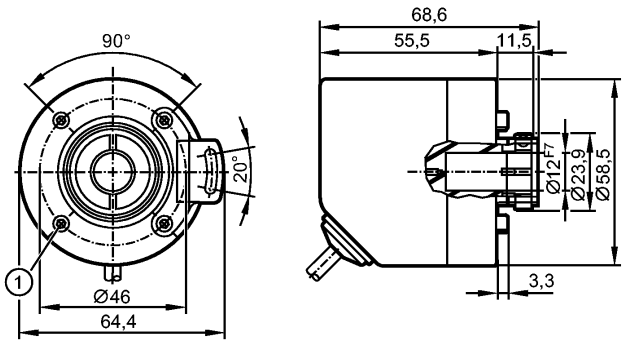

1: M3

CE IO-Link

Product characteristics		
Hollow shaft encoder open to one side		
HTL, TTL 50 mA		
Cable		
Magnetic detection system		
Resolution 1...9999		
Electrical data		
Operating voltage	[V]	4.5...30 DC
Current consumption	[mA]	< 150
Max. permissible rpm / elec.	[1/min]	12000
Phase difference A und B	[°]	90
Switching frequency	[kHz]	1000
Reverse polarity protection		yes
Short-circuit protection		yes
Protection class		III
Pulse diagram		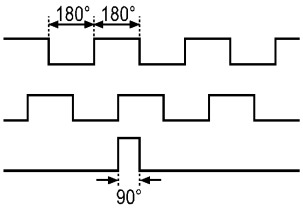 Direction of rotation clockwise (looking at the shaft)
Outputs		
Output function		HTL, TTL 50 mA
Measuring / setting range		
Encoders		
Resolution		programmable, factory setting 1024
Accuracy / deviations		
Accuracy		< 0.1°
Reaction times		
Power-on delay time	[s]	0.5
Software / programming		
Programming options		Resolution, rotational direction, HTL, TTL

RO3500

INCREMENTAL ENCODER BASIC LINE

Interfaces		
IO-Link Device		
Transfer type		COM 2
IO-Link revision		V1.1
SIO mode		yes
Min. process cycle time	[ms]	2.3
Mechanical data		
Max. permissible rpm / mech.	[1/min]	12000
Starting torque	[Ncm]	< 2 (20 °C)
Shaft, material	[mm]	hollow shaft open to one side Ø 12 H7, stainless steel
Installation depth/shaft	[mm]	27
Max. axial shaft alignment	[mm]	0.5
Vibration resistance		30 g
Shock resistance		200 g
Housing materials		flange: aluminium; housing: stainless steel 444/1.4521; cable plug: polyamide
Tightening torque	[Nm]	< 0.7 (Screw)
Weight	[kg]	0.483
Environment		
Max. relative air humidity	[%]	95, Condensation not permissible
Ambient temperature	[°C]	-40…80, -25 °C for flexibly laid cable
Storage temperature	[°C]	-40...80
Protection		IP 65 / IP66; IP 67 (housing); IP 64 (shaft)
Tests / approvals		
MTTF	[Years]	292.2
Electrical connection		
Connection		PUR cable, screened / 2 m; 5 x 0.14 mm²; Ø 4.9 mm; radial, can also be used axially
Max. cable length	[m]	100

Wiring

Core colours

BK	black
BN	brown
BU	blue
GY	grey
WH	white

IO-Link:

BN:	L+
WH:	not to be used
BU:	L-
GY:	not to be used
BK:	IO-Link
screen:	Housing

encoder:

BN:	UB
WH:	A
BU:	GND
GY:	B
BK:	Z/0-Pulse (90 deg)
screen:	Housing

Remarks		
Pack quantity	[piece]	1