efector400

RV3100

INCREMENTAL ENCODER BASIC LINE

Encoders

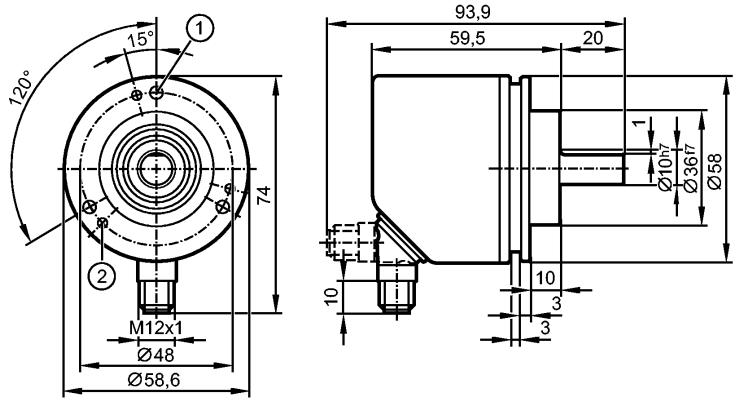

1: M4 x 0.7 6 mm deep
2: M3 x 0.5 6 mm deep

CE IO-Link

Product characteristics		
Solid shaft encoder		
HTL, TTL 50 mA		
Connector		
Clamping flange		
Magnetic detection system		
Resolution 1...9999		
Electrical data		
Operating voltage	[V]	4.5...30 DC
Current consumption	[mA]	< 150
Max. permissible rpm / elec.	[1/min]	12000
Phase difference A und B	[°]	90
Switching frequency	[kHz]	1000
Reverse polarity protection		yes
Short-circuit protection		yes
Protection class		III
Pulse diagram		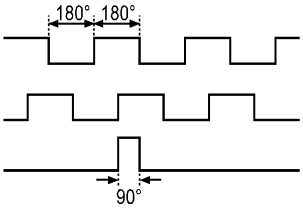 Direction of rotation clockwise (looking at the shaft)
Outputs		
Output function		HTL, TTL 50 mA
Measuring / setting range		
Encoders		
Resolution		programmable, factory setting 1024
Accuracy / deviations		
Accuracy		< 0.1°
Reaction times		

RV3100

INCREMENTAL ENCODER BASIC LINE

Power-on delay time	[s]	0.5
Software / programming		
Programming options		Resolution, rotational direction, HTL, TTL
Interfaces		
IO-Link Device		
Transfer type		COM 2
IO-Link revision		V1.1
SIO mode		yes
Min. process cycle time	[ms]	2.3
Mechanical data		
Max. permissible rpm / mech.	[1/min]	12000
Starting torque	[Ncm]	< 1 (20 °C)
Max. shaft load (at the shaft end)	[N]	axial 40; radial 60
Shaft, material	[mm]	Ø 10, stainless steel
Vibration resistance		30 g
Shock resistance		200 g
Housing materials		flange: aluminium; housing: stainless steel 444/1.4521; connector: stainless steel 316/1.4401
Weight	[kg]	0.363
Environment		
Max. relative air humidity	[%]	95, Condensation not permissible
Ambient temperature	[°C]	-40...85
Storage temperature	[°C]	-40...85
Protection		IP 65 / IP 66; IP 67 (housing); IP 64 (shaft)
Tests / approvals		
MTTF	[Years]	292.2
Electrical connection		
Connection		M12 connector; radial, can also be used axially; 5-pole
Max. cable length	[m]	100

Wiring

IO-Link:

1: L+
2: not to be used
3: L-
4: IO-Link
5: not to be used
screen: plug

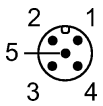

encoder:

1: UB
2: A
3: GND
4: Z/0-Pulse (90 deg)
5: B
screen: plug

Remarks		
Pack quantity	[piece]	1