E40623

Welding adapters EN10357 series C (ASME BPE)

ADAPT EN10357-C DN50

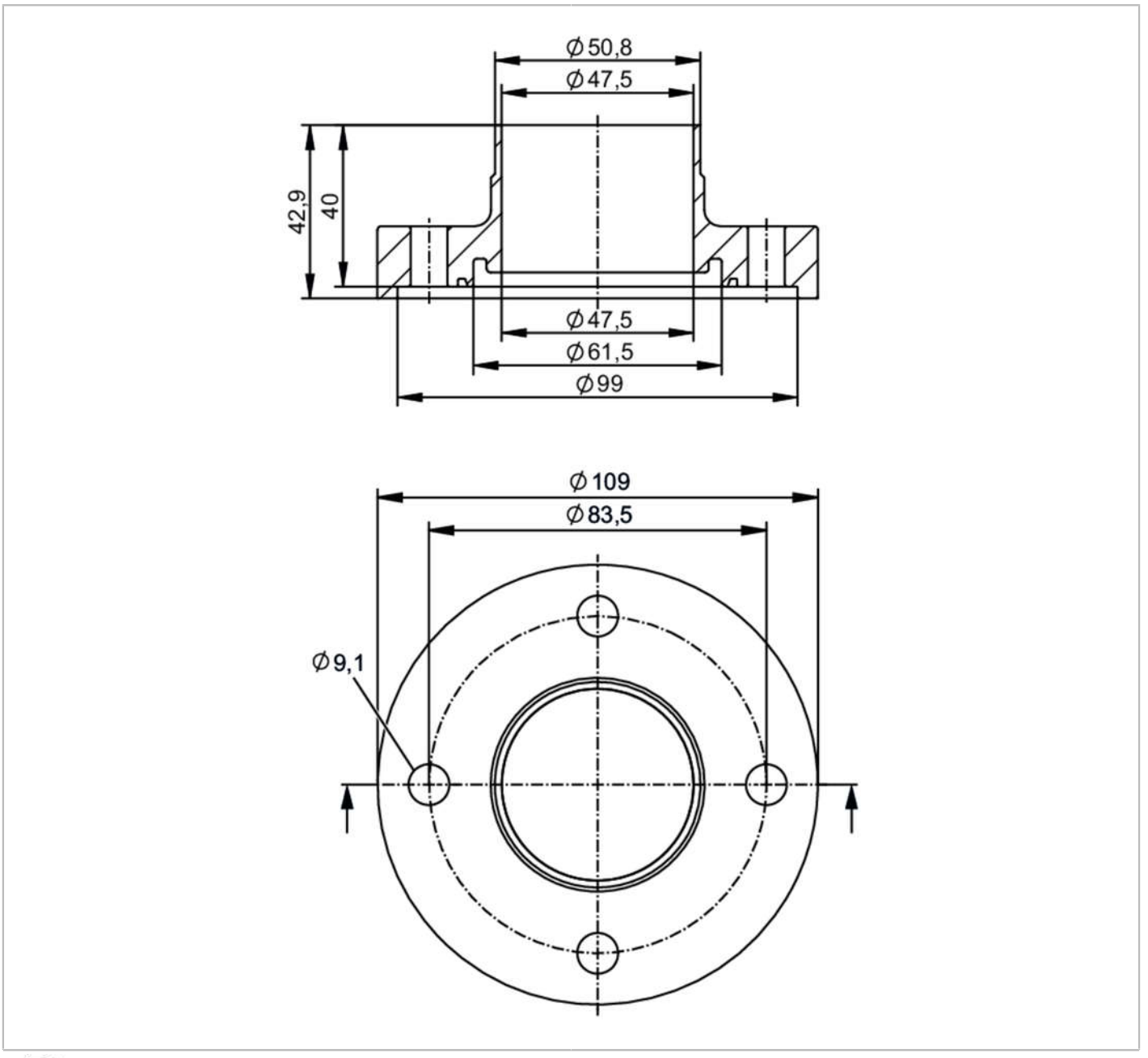

EC 1935/2004 FCM

Application			
Design		for volumetric flow meters SMF	
Application		food and beverage industry; hygienic systems	
Pressure rating		25 bar	2.5 MPa
Tests / approvals			
Pressure Equipment Directive		A possible classification to PED depends on the application and has to be carried out by the user / operator.	
Safety instructions		The compatibility between medium and product material has to be checked in all applications.	
Mechanical data			
Weight	[g]	2580.4	

E40623

Welding adapters EN10357 series C (ASME BPE)

ADAPT EN10357-C DN50

Materials	stainless steel (316L/1.4404)
Nominal diameter	DN50 (2“)
Sensor connection	ifm-specific device flange
Process connection	welding adapter EN10357 series C (ASME BPE)
Process connection suitable for pipe standard	(JIS G3447); (DIN EN 10357 series C); (DIN 11866 series C); (BS 4825 Part 1)
Surface characteristics Ra/Rz of the wetted parts	Ra ≤ 0.4 µm
Accessories	
Items supplied	screws 8
Remarks	
Pack quantity	2 pcs.