Inductive sensor
NI12U-EG18SK-AN6X

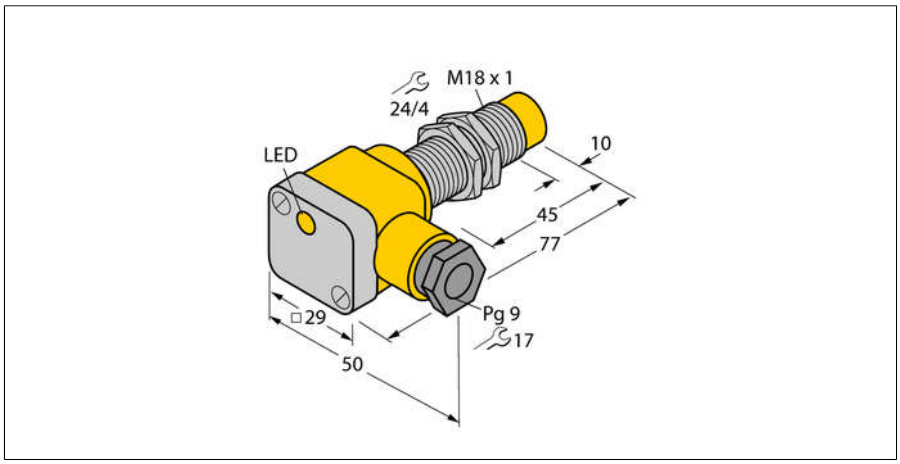

- **Threaded barrel, M18 x 1**
- **Stainless steel, 1.4301**
- **Factor 1 for all metals**
- **Protection class IP68**
- **Magnetic field immune**
- **Extended temperature range**
- **High switching frequency**
- **Predamping protection through self-compensation**
- **DC 3-wire, 10…30 VDC**
- **NO contact, NPN output**
- **Terminal chamber**

Type code	NI12U-EG18SK-AN6X
Ident no.	1645420
Rated operating distance Sn	12 mm
Mounting condition	non-flush, partially embeddable
Assured sensing range	≤ (0,81 x Sn) mm
Repeatability	≤ 2 % of full scale
Temperaturdrift	10 %
	≤ ± 20 %, ≤ -25 °C v ≥ +70 °C
Hysteresis	3…15 %
Ambient temperature	-30…+85 °C
Operating voltage	10…30VDC
Residual ripple	≤ 10 % U_{ss}
DC rated operational current	≤ 200 mA
No-load current I_0	≤ 15 mA
Residual current	≤ 0.1 mA
Rated insulation voltage	≤ 0.5 kV
Short-circuit protection	yes/ cyclic
Voltage drop at I_e	≤ 1.8 V
Wire breakage / Reverse polarity protection	yes/ complete
Output function	3-wire, NO contact, NPN
Protection class	⧈
Switching frequency	2 kHz
Design	threaded barrel, M18 x 1
Dimensions	77 mm
Housing material	metal, V2A (1.4301)
Terminal chamber cover material	plastic, Ultem
Terminal chamber housing material	plastic, plastic, PA12-GF20
Material active face	Plastic, PBT
Max. tightening torque housing nut	25 Nm
Connection	terminal chamber
Clamping ability	≤ 2.5 mm²
Cable external diameter	4.5…8mm
Vibration resistance	55 Hz (1 mm)
Shock resistance	30 g (11 ms)
Protection class	IP68
MTTF	874 years acc. to SN 29500 (Ed. 99) 40 °C
Switching state	LED yellow
Included in scope of supply	cable gland; 2x plastic seals

Wiring diagram

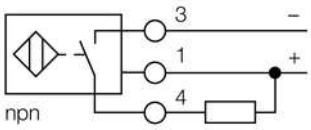

Functional principle

Inductive sensors detect metal objects contactless and wear-free. Due to the patented ferrite-less 3-coil system, *uprox*® factor 1 sensors have distinct advantages compared to conventional sensors. They detect all metals at the same switching distance, are magnetic field immune and feature large switching distances.

Edition • 2013-10-11T05:56:39+02:00

Distance D	3 x B
Distance W	3 x Sn
Distance T	3 x B
Distance S	0.5 x B
Distance G	6 x Sn
Distance N	2 x Sn

Diameter of the active area B	Ø 18 mm

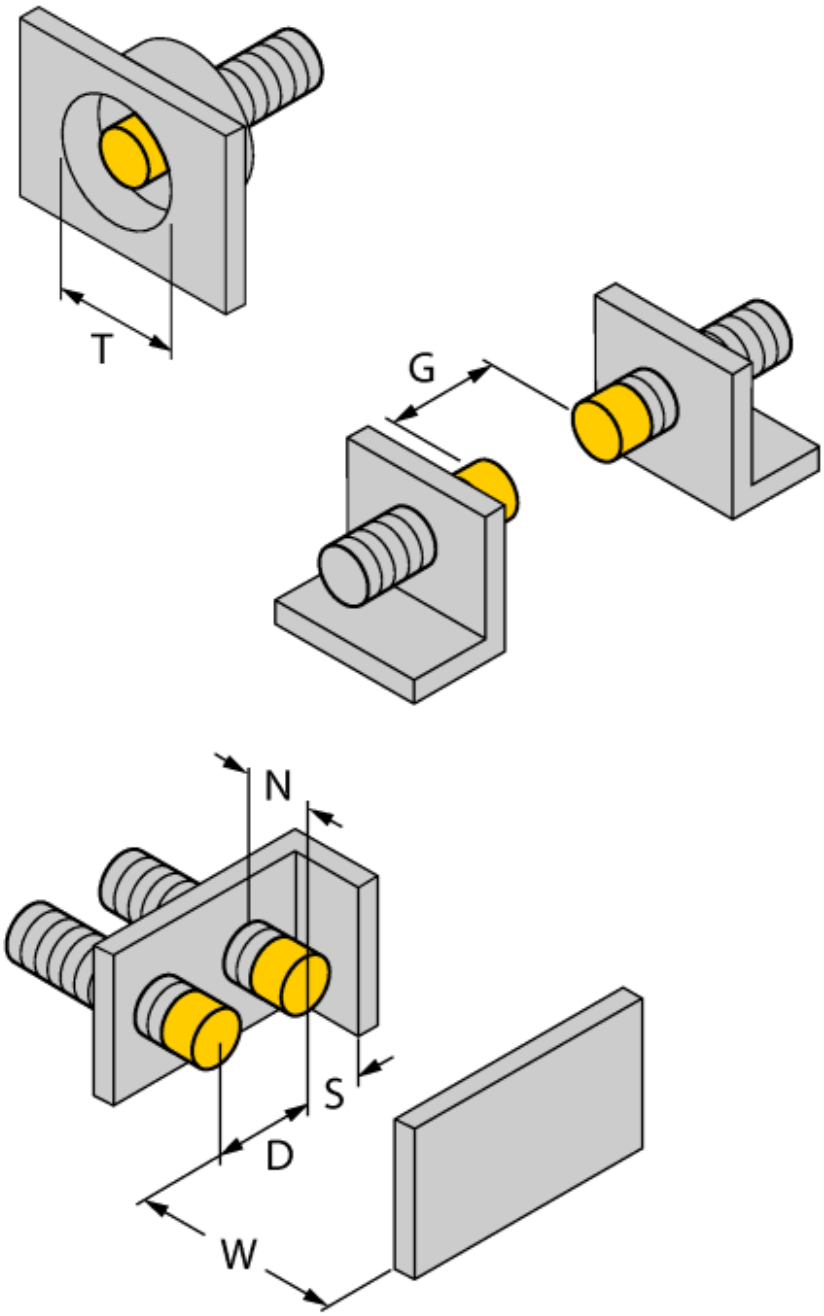

Edition • 2013-10-11T05:56:39+02:00

Accessories

Type code	Ident no.	Description	Dimension drawing
QM-18	6945102	Quick-mount bracket with dead-stop; material: Chrome-plated brass Male thread M24 x 1.5. Note: The switching distance of proximity switches can be reduced by the use of quick-mount brackets.	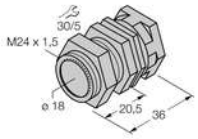
BST-18B	6947214	Fixing clamp for threaded barrel devices, with dead-stop; material: PA6	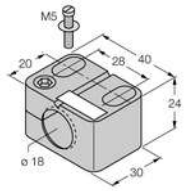
MW-18	6945004	Mounting bracket for threaded barrel devices; material: Stainless steel A2 1.4301 (AISI 304)	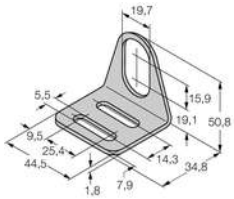
BSS-18	6901320	Mounting bracket for smooth and threaded barrel devices; material: Polypropylene	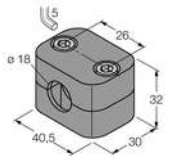

Edition • 2013-10-11T05:56:39+02:00