# DATASHEET - Q18S3R



**Key-operated actuator, 3 positions, black, maintained**

| | |
|---|---|
| **Part no.** | **Q18S3R** |
| **Catalog No.** | **072314** |
| **Alternate Catalog No.** | **Q18S3R** |

## Delivery program

| | | | |
|---|---|---|---|
| Product range | | | RMQ16 |
| Basic function | | | Key-operated buttons |
| Mounting hole diameter | ∅ | mm | 16 |
| Single unit/Complete unit | | | Single unit |
| Design | | | Key operated |
| | | | maintained |
| **Function:** | | | |
| | | | 45° # 45° |
| | | | 3 positions |
| **Key withdrawable in position** | | | |
| | | | 0 |
| | | | II |
| Degree of Protection | | | IP65 |
| Front ring | | | without bezel |
| Connection to SmartWire-DT | | | no |
| Information about equipment supplied | | | With 1 key |

## Technical data

### General

| | | | |
|---|---|---|---|
| Standards | | | IEC/EN 60947 |
| Lifespan, mechanical | Operations | x $10^6$ | > 3 |
| Operating frequency | Operations/h | | ≦ 1800 |
| Operating torque | | Nm | ≦ 0.4 |
| Degree of protection, IEC/EN 60529 | | | IP65 |
| Climatic proofing | | | Damp heat, constant, to IEC 60068-2-78<br>Damp heat, cyclic, to IEC 60068-2-30 |
| Ambient temperature | | | |
| Open | | °C | -25 - +60 |
| Enclosed | | °C | - 25 - 40 |
| Mounting position | | | As required |
| Mechanical shock resistance | | g | > 40<br>according to IEC 60068-2-27<br>Shock duration 11 ms<br>Sinusoidal |
| Terminal capacities | | $mm^2$ | 0.5 - 1.0 |
| Blade terminal | | | 2.8 x 0.8 mm to DIN 46244 |
| Fast-on connectors | | | 2.8 x 0.8 mm to DIN 46247 and IEC 60760 |

### Contacts

| | | | |
|---|---|---|---|
| Rated impulse withstand voltage | $U_{imp}$ | V AC | 800 |
| Rated insulation voltage | $U_i$ | V | 250 |
| Overvoltage category/pollution degree | | | III/3 |
| Rated operational voltage | $U_e$ | V AC | 24 |
| Control circuit reliability | | | |
| at 24 V DC/5 mA | $H_F$ | Fault probability | < $10^{-7}$, < 1 failure in $10^7$ operations |
| at 5 V DC/1 mA | $H_F$ | Fault probability | < 5 x $10^{-6}$, < 1 failure in 5 x $10^6$ operations |
| Use of insulated ferrule ISH 2,8 | | | On >24 V AC/DC recommended<br>On >50 V AC or 120 V DC mandatory, also on unoccupied blade terminals |

## Design verification as per IEC/EN 61439

| | | | |
|---|---|---|---|
| Technical data for design verification | | | |
| Rated operational current for specified heat dissipation | $I_n$ | A | 0 |
| Heat dissipation per pole, current-dependent | $P_{vid}$ | W | 0 |
| Equipment heat dissipation, current-dependent | $P_{vid}$ | W | 0 |
| Static heat dissipation, non-current-dependent | $P_{vs}$ | W | 0 |
| Heat dissipation capacity | $P_{diss}$ | W | 0 |
| Operating ambient temperature min. | | °C | -25 |
| Operating ambient temperature max. | | °C | 60 |
| IEC/EN 61439 design verification | | | |
| 10.2 Strength of materials and parts | | | |
| 10.2.2 Corrosion resistance | | | Meets the product standard's requirements. |
| 10.2.3.1 Verification of thermal stability of enclosures | | | Meets the product standard's requirements. |
| 10.2.3.2 Verification of resistance of insulating materials to normal heat | | | Meets the product standard's requirements. |
| 10.2.3.3 Verification of resistance of insulating materials to abnormal heat and fire due to internal electric effects | | | Meets the product standard's requirements. |
| 10.2.4 Resistance to ultra-violet (UV) radiation | | | Please enquire |
| 10.2.5 Lifting | | | Does not apply, since the entire switchgear needs to be evaluated. |
| 10.2.6 Mechanical impact | | | Does not apply, since the entire switchgear needs to be evaluated. |
| 10.2.7 Inscriptions | | | Meets the product standard's requirements. |
| 10.3 Degree of protection of ASSEMBLIES | | | Does not apply, since the entire switchgear needs to be evaluated. |
| 10.4 Clearances and creepage distances | | | Meets the product standard's requirements. |
| 10.5 Protection against electric shock | | | Does not apply, since the entire switchgear needs to be evaluated. |
| 10.6 Incorporation of switching devices and components | | | Does not apply, since the entire switchgear needs to be evaluated. |
| 10.7 Internal electrical circuits and connections | | | Is the panel builder's responsibility. |
| 10.8 Connections for external conductors | | | Is the panel builder's responsibility. |
| 10.9 Insulation properties | | | |
| 10.9.2 Power-frequency electric strength | | | Is the panel builder's responsibility. |
| 10.9.3 Impulse withstand voltage | | | Is the panel builder's responsibility. |
| 10.9.4 Testing of enclosures made of insulating material | | | Is the panel builder's responsibility. |
| 10.10 Temperature rise | | | Not applicable. |
| 10.11 Short-circuit rating | | | Is the panel builder's responsibility. The specifications for the switchgear must be observed. |
| 10.12 Electromagnetic compatibility | | | Is the panel builder's responsibility. The specifications for the switchgear must be observed. |
| 10.13 Mechanical function | | | The device meets the requirements, provided the information in the instruction leaflet (IL) is observed. |

## Technical data ETIM 7.0

Low-voltage industrial components (EG000017) / Front element for selector switch (EC000222)

Electric engineering, automation, process control engineering / Low-voltage switch technology / Command and alarm device / Front element for selector switches (ecl@ss10.0.1-27-37-12-13 [AKF031014])

| | | | |
|---|---|---|---|
| Number of switch positions | | | 3 |
| Type of control element | | | Key |
| Suitable for illumination | | | No |
| Colour control element | | | Black |
| Colour indicator light cap | | | Other |
| Construction type lens | | | Square |
| Hole diameter | | mm | 16 |
| Width opening | | mm | 0 |
| Height opening | | mm | 0 |
| Switching function latching | | | Yes |
| Spring-return | | | No |
| With front ring | | | Yes |
| Material front ring | | | Plastic |
| Colour front ring | | | Black |
| Degree of protection (IP), front side | | | IP65 |

| | |
|---|---|
| Degree of protection (NEMA) | 1 |

## Approvals

| | |
|---|---|
| Product Standards | IEC/EN 60947-5; UL 508; CSA-C22.2 No. 14-05; CE marking |
| UL File No. | E29184 |
| UL Category Control No. | NKCR |
| CSA File No. | 46552 |
| CSA Class No. | 3211-03 |
| North America Certification | UL listed, CSA certified |
| Degree of Protection | UL/CSA Type 1 |

## Dimensions

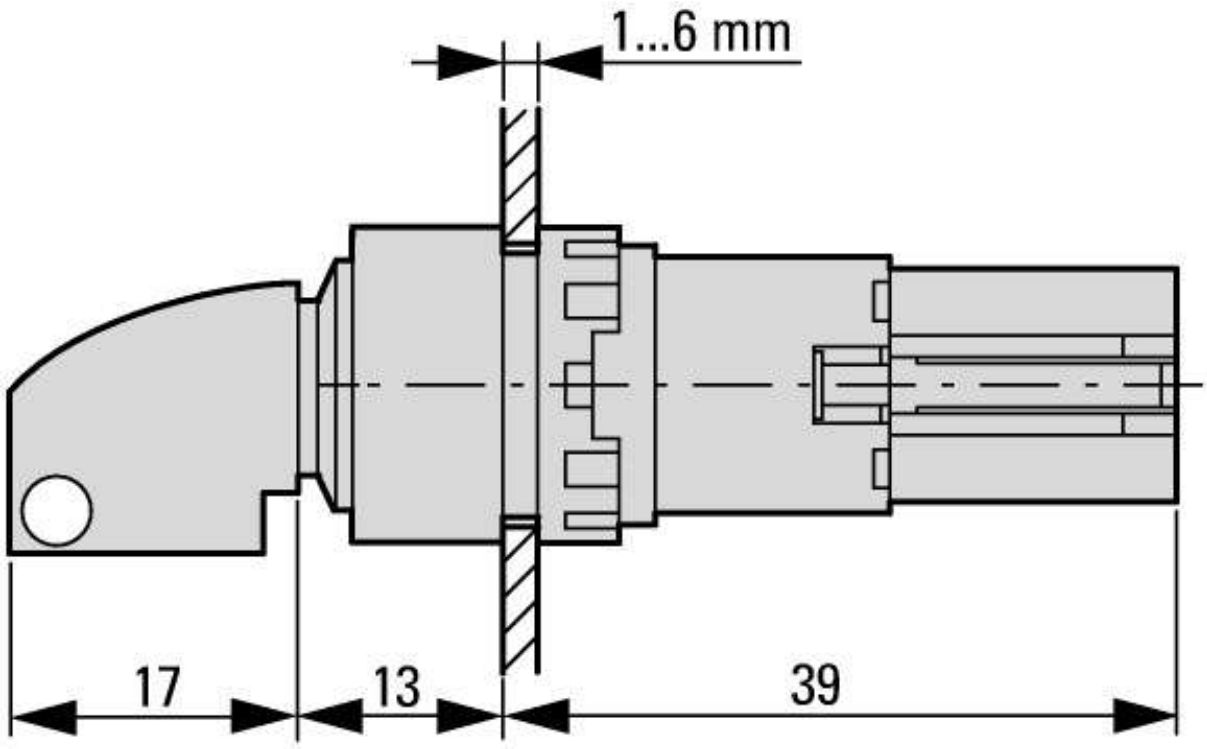


Actuating and indicator elements
Square style

## Additional product information (links)

| **IL04716016Z (AWA1160-1429) Mounting of components** | |
|---|---|
| IL04716016Z (AWA1160-1429) Mounting of components | https://es-assets.eaton.com/DOCUMENTATION/AWA_INSTRUCTIONS/IL04716016Z2018_05.pdf |


© 02/2021 by Eaton Industries GmbH