This document was generated on 03/28/2022

PLEASE CHECK WWW.MOLEX.COM FOR LATEST PART INFORMATION

Part Number: 1200845113

Status: Active

Overview: Brad Ultra-Lock Connection System

Description: Ultra-Lock (M12) Receptacle, 5 Poles, M16x1.5 Mounting Threads, Female (Straight) to 0.34mm² PVC Leads, 0.30m (11.81") Length

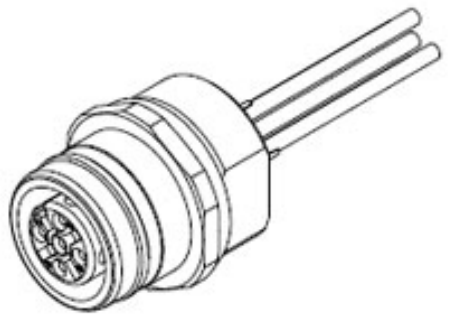

Series image - Reference only

Documents:

Drawing (PDF)

RoHS Certificate of Compliance (PDF)

Agency Certification

CSA	LR6837

General

Product Family	Industrial Receptacles
Series	120084
IP Rating	IP69K
NEMA Rating	NEMA 6
Overview	Brad Ultra-Lock Connection System
Product Name	Ultra-Lock (M12)
Type	Single Ended (pigtail)
UPC	883906778965

Physical

Coupling Type	Internal Thread
Gender	Female
Keyway	Single
Length	0.30m
Material - Component	Nickel-plated Brass
Mounting Thread Size	M16 x 1.5
Net Weight	23.161/g
Orientation	Straight
Panel Mount	Front
Poles	5
Temperature Range - Operating	-25° to +90°C
Wire Size AWG	22
Wire/Cable Type	UL 1569

Electrical

Current - Maximum per Contact	4.0A
Voltage - Maximum	60V

Material Info

Engineering Number	WR5U20E03C3003

Reference - Drawing Numbers

Sales Drawing	1200845107-000

EU ELV
Not Relevant

EU RoHS
Compliant

China RoHS

REACH SVHC
Contained Per - D(2021)10043-DC (17 Jan 2022)
Lead

Halogen-Free Status
Not Low-Halogen

For more information, please visit Contact US

China ROHS	Green Image
ELV	Not Relevant
RoHS Phthalates	Not Contained
ZZCERT_CE - Declaration of Conformity	CER_4000380967_00_000.pdf

Search Parts in this Series
120084 Series

This document was generated on 03/28/2022

PLEASE CHECK WWW.MOLEX.COM FOR LATEST PART INFORMATION