PI2798

Flush pressure sensor with display

PI-,25BREA01-MFRKG/US/ /P

Alternative articles: PI1708

When selecting an alternative article and accessories please note that technical data may differ!

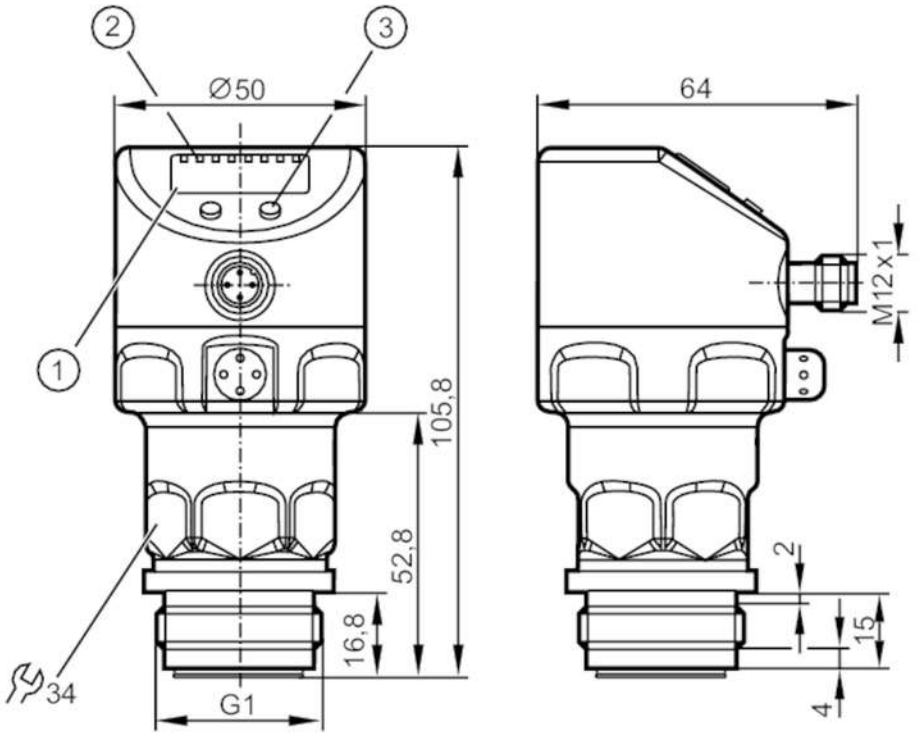

1 alphanumeric display 4-digit
2 status LEDs
3 programming button

ACS CE CRN cULus LISTED EC 1935/2004 EHEDG Certified FCM FDA IO-Link Reg31 UKCA

Product characteristics				
Number of inputs and outputs	Number of digital outputs: 2; Number of analogue outputs: 1			
Measuring range	-0.0124...0.25 bar	-12.4...250 mbar	-5...100.4 inH2O	-1.24...25 kPa
Process connection	threaded connection G 1 external thread Aseptoflex Vario			

Application				
Special feature	Gold-plated contacts			
Application	flush mountable for the food and beverage industry			
Media	viscous media and liquids with suspended particles; liquids and gases			
Medium temperature [°C]	-25...125; (145 max. 1h)			
Min. bursting pressure	30000 mbar	12044 inH2O	3000 kPa	
Pressure rating	6000 mbar	2400 inH2O	600 kPa	
Vacuum resistance [mbar]	-1000			
Type of pressure	relative pressure			
No dead space	yes			
MAWP (for applications according to CRN) [bar]	10			

PI2798

Flush pressure sensor with display

PI-,25BREA01-MFRKG/US/ /P

Electrical data					
Min. insulation resistance	[MΩ]	100; (500 V DC)			
Protection class		III			
Reverse polarity protection		yes			
Measuring principle		hydrostatic			
Integrated watchdog		yes			
2-wire					
Operating voltage	[V]	20...32 DC			
Current consumption	[mA]	3.6...21			
Power-on delay time	[s]	1			
3-wire					
Operating voltage	[V]	18...32 DC			
Current consumption	[mA]	< 45			
Power-on delay time	[s]	0.5			
Inputs / outputs					
Number of inputs and outputs		Number of digital outputs: 2; Number of analogue outputs: 1			
Outputs					
Total number of outputs		2			
Output signal		switching signal; analogue signal; IO-Link; (configurable)			
Electrical design		PNP/NPN			
Number of digital outputs		2			
Output function		normally open / normally closed; (parameterisable)			
Number of analogue outputs		1			
Analogue current output	[mA]	4...20, invertible; (scalable)			
Short-circuit protection		yes			
Type of short-circuit protection		pulsed			
Overload protection		yes			
2-wire					
Max. load	[Ω]	300			
3-wire					
Max. voltage drop switching output DC	[V]	2			
Permanent current rating of switching output DC	[mA]	250			
Switching frequency DC	[Hz]	125			
Max. load	[Ω]	(Ub - 10 V) / 20 mA			
Measuring/setting range					
Measuring range		-0.0124...0.25 bar	-12.4...250 mbar	-5...100.4 inH2O	-1.24...25 kPa
Set point SP		-12...250 mbar	-4.8...100.4 inH2O	-1.2...25 kPa	
Reset point rP		-12.4...249.6 mbar	-5...100.2 inH2O	-1.24...24.96 kPa	
Analogue start point		-12.4...187.4 mbar	-5...75.2 inH2O	-1.24...18.74 kPa	
Analogue end point		50...250 mbar	20.1...100.4 inH2O	5...25 kPa	
In steps of		0.2 mbar	0.1 inH2O	0.02 kPa	

PI2798

Flush pressure sensor with display

PI-,25BREA01-MFRKG/US/ /P

Factory setting		SP1 = 62.4 mbar	rP1 = 57.4 mbar
		SP2 = 187.4 mbar	rP2 = 182.4 mbar
		ASP = 0.0 mbar	AEP = 250.0 mbar

Accuracy / deviations		
Switch point accuracy [% of the span]	< ± 0,2; (Turn down 1:1)	
Repeatability [% of the span]	< ± 0,1; (with temperature fluctuations < 10 K; Turn down 1:1)	
Characteristics deviation [% of the span]	< ± 0,2; (Turn down 1:1 , linearity, incl. hysteresis and repeatability , limit value setting to DIN EN IEC 62828-1)	
Linearity deviation [% of the span]	< ± 0,15; (Turn down 1:1)	
Hysteresis deviation [% of the span]	< ± 0,15; (Turn down 1:1)	
Long-term stability [% of the span]	< ± 0,1; (Turn down 1:1; per year)	
Temperature coefficient zero point [% of the span / 10 K]	< ± 0,05; (0...70 °C)	
Temperature coefficient span [% of the span / 10 K]	< ± 0,15; (0...70 °C)	
Response times		
Damping process value dAP [s]	0...30	
Damping for the analogue output dAA [s]	0.01...99.99	
2-wire		
Step response time analogue output [ms]	45	
3-wire		
Min. response time of switching output (dAP) [ms]	3	
Step response time analogue output [ms]	7	
Interfaces		
Communication interface	IO-Link	
Transmission type	COM2 (38,4 kBaud)	
IO-Link revision	1.0	
Profiles	no profile	
SIO mode	yes	
Required master port type	A	
Process data analogue	1	
Process data binary	2	
Min. process cycle time [ms]	2.3	
Supported DeviceIDs	Type of operation	DeviceID
	Default	257
Operating conditions		
Ambient temperature [°C]	-25...80	
Storage temperature [°C]	-40...100	

PI2798

Flush pressure sensor with display

PI-,25BREA01-MFRKG/US/ /P

Protection		IP 67; IP 68; IP 69K	
Tests / approvals			
EMC		EN 61000-4-2 ESD	4 kV CD / 8 kV AD
		EN 61000-4-3 HF radiated	10 V/m
		EN 61000-4-4 Burst	2 kV
		EN 61000-4-5 Surge	0,5/1 kV
		EN 61000-4-6 HF conducted	10 V
Shock resistance		DIN IEC 68-2-27	50 g (11 ms)
Vibration resistance		DIN IEC 68-2-6	20 g (10...2000 Hz)
MTTF	[years]	160	
Note on approval		factory certificate available as download at www.factory-certificate.ifm	
UL approval		UL Approval no.	J018
		File number UL	E174189
Mechanical data			
Weight	[g]	354	
Materials		stainless steel (1.4404 / 316L); FKM; PTFE; PBT; PEI; PFA	
Materials (wetted parts)		ceramics (99.9 % Al2O3); stainless steel (1.4435 / 316L); surface characteristics: Ra < 0,4 / Rz 4; PTFE	
Min. pressure cycles		100 million	
Process connection		threaded connection G 1 external thread Aseptoflex Vario	
Displays / operating elements			
Display		Display unit	LED, green
		switching status	LED, yellow
		function display	alphanumeric display, 4-digit
		measured values	alphanumeric display, 4-digit
Display unit		mbar; kPa; inH2O; mmWS; % of the span	
Remarks			
Pack quantity		1 pcs.	

Electrical connection

Connector: 1 x M12; coding: A; Contacts: gold-plated



PI2798

Flush pressure sensor with display

PI-,25BREA01-MFRKG/US/ /P

Connection

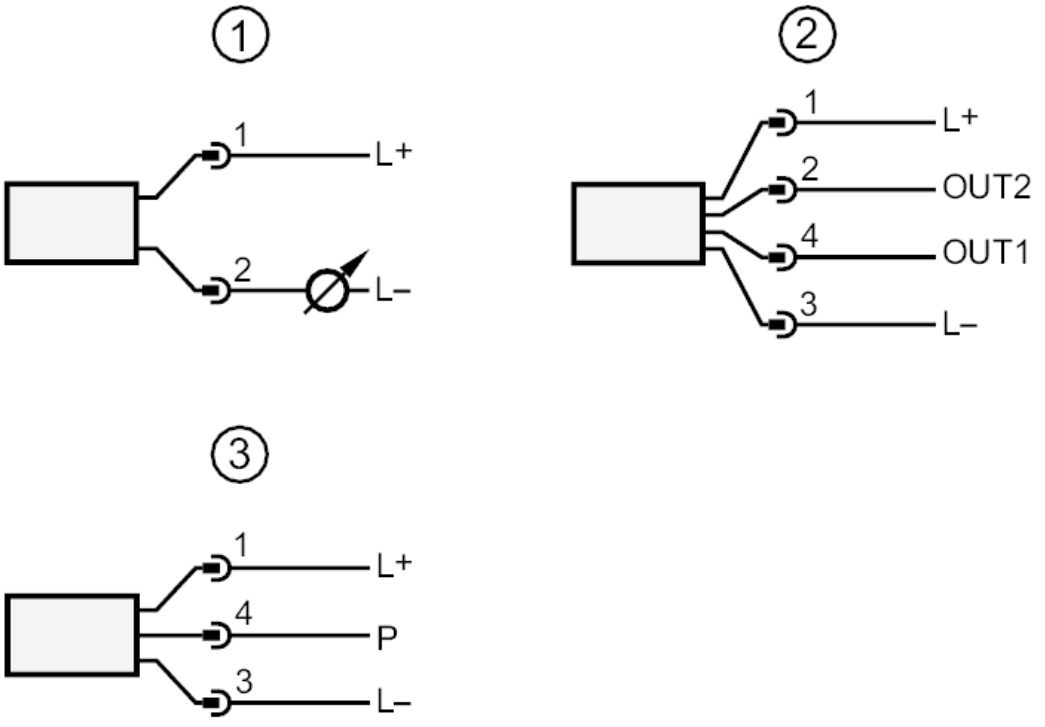

1	connection for 2-wire operation
2	connection for 3-wire operation :
OUT1	switching output
OUT2	switching output
	analogue output
3	connection for IO-Link parameter setting (P = communication via IO-Link)