Brand of NTN corporation

Technical data

USFLE208

Bearing units



Grey cast housing, radial insert ball bearing with socket set screws, single lip seal

KIT CONTENT

US.208.G2, FLE208

VISUAL (S)

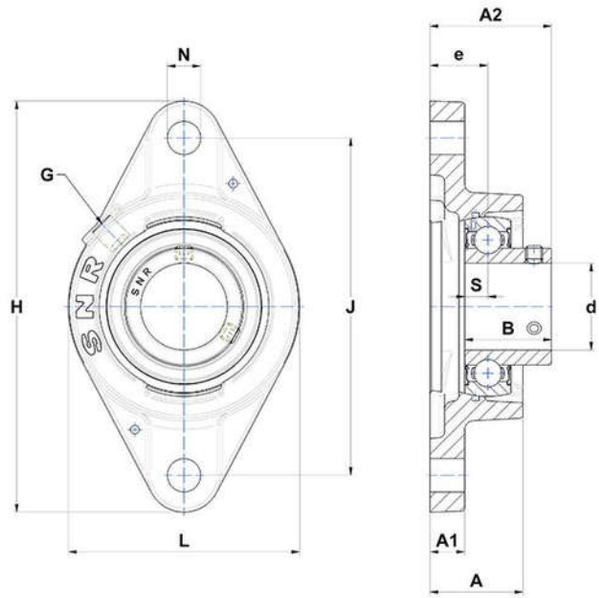

PRODUCT DEFINITION

Brand	SNR
A - Housing height	37,5 mm
A1 - Housing foot height / flange height	13 mm
A2 - Total height from mounting surface	49 mm
B - Width of Inner Ring	34 mm
d - Shaft diameter	40 mm

PRODUCT DEFINITION	
e - Distance mounting surface to bearing center	24 mm
G - Grease fitting	R1/8"
H - Housing length, width or diameter	172 mm
J - Mounting holes distance	143,5 mm
L - Housing width / diameter	105 mm
N - Mounting hole dimension	14 mm
S - Distance front side/bearing centre	9 mm

PRODUCT PERFORMANCE	
C - Dynamic load rating	29600000 mN
C0 - Static load rating	18200000 mN
Operating temperature min.	253,15 °K
Operating temperature max.	373,15 °K

OTHER FEATURES	
Mass	1,6 kg
Recommended tightening torque for set screw	11.5 N-m