SCHAEFFLER

Tapered roller bearings 31311-A (Series 313)

main dimensions to DIN ISO 355 / DIN 720, separable, adjusted or in pairs

The datasheet is only an overview of dimensions and basic load ratings of the selected product. Please always observe all the guidelines in these overview pages. Further information is given on many products under the menu item "Description". You can also order comprehensive information via the Catalogue selection system (https://www.schaeffler.de/content.schaeffler.de/en/news_media/index.jsp) or by telephone on +49 (91 32) 82 - 28 97.

d	55	mm	
D	120	mm	
T	31,5	mm	
a	39	mm	≈
B	29	mm	
C	21	mm	
$C_{a\ min}$	4	mm	
$C_{b\ min}$	10,5	mm	
d_1	88	mm	≈
$D_{a\ max}$	110	mm	
$d_{a\ max}$	68	mm	
$D_{a\ min}$	94	mm	

$D_{b\ min}$	113 mm	
$d_{b\ min}$	65 mm	
$r_{1,2\ min}$	2,5 mm	
$r_{3,4\ min}$	2 mm	
$r_{a\ max}$	2,5 mm	
$r_{b\ max}$	2 mm	

m	1,75 kg	≈ Mass
C_r	123000 N	Basic dynamic load rating, radial
C_{0r}	139000 N	Basic static load rating, radial
e	0,83	
Y	0,73	
Y_0	0,4	
C_{ur}	16700 N	Fatigue limit load, radial
n_G	5900 1/min	Limiting speed
$n_{\vartheta r}$	4100 1/min	Reference speed
	T7FB055	Comparative designation to DIN ISO 355

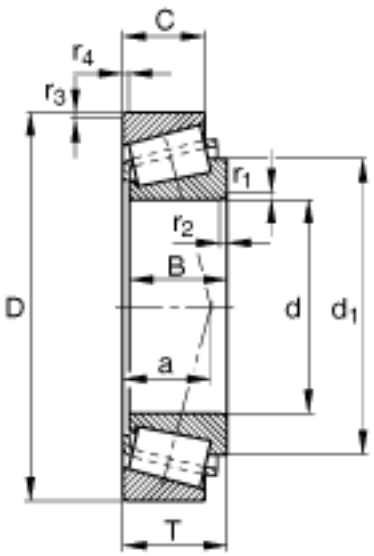
C
r4
r3
r1
r2
B
D
d
d1
a
T

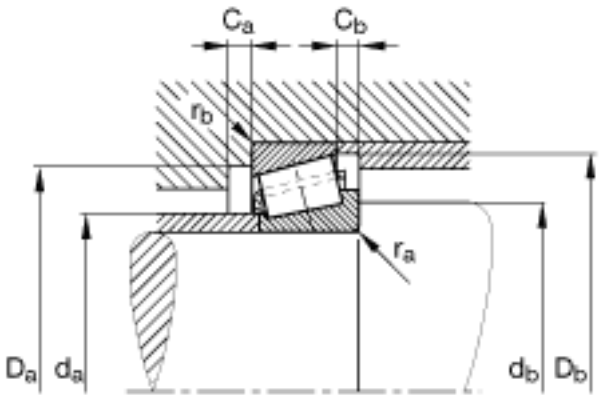
Ca
Cb
rb
ra
Da
da
db
Db