Receptacles

# BCC M454-0000-2A-RM020-005
# Order Code: BCC099A

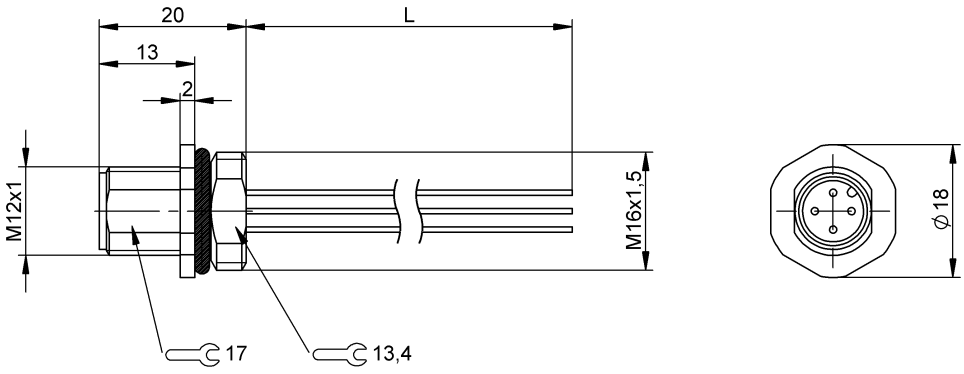


## Basic features

| | |
|---|---|
| **Approval/Conformity** | CE<br>EAC<br>WEEE |

## Electrical connection

| | |
|---|---|
| **Conductor cross-section** | 0.25 mm² |
| **Connection** | M12x1-Male, Straight, 4-pin, A-coded |
| **Number of conductors** | 4 |

## Electrical data

| | |
|---|---|
| **Operating voltage Ub** | 250 VDC / 250 VAC |
| **Rated current (40 °C)** | 4.0 A |

## Environmental conditions

| | |
|---|---|
| **Ambient temperature** | -40...85 °C |
| **IP rating** | IP68 |

## Material

| | |
|---|---|
| **Conductor insulation material** | TPE |
| **Housing material** | Die-cast zinc, nickel-plated |
| **Housing material, surface protection** | nickel-plated |
| **Material contact carrier** | PA |
| **Material contacts** | Brass |

## Mechanical data

| | |
|---|---|
| **Lead length L** | 0.50 m |
| **Mounting part** | M16x1.5 |

## Remarks

Enclosure rating per IEC 60529, only in screwed state with the associated mating piece.
Nut M16 included in scope of delivery

# BCC M454-0000-2A-RM020-005
# Order Code: BCC099A

## Connector Drawings

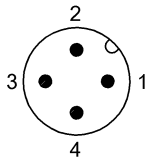


PIN 1: brown
PIN 2: white
PIN 3: blue
PIN 4: black

## Wiring Diagrams

