MURR ELEKTRONIK
stay connected

## IO-Link/Analog Wandler

AI Multi U/I , M12, Single-Wire

IO-Link / analog converter
AI Multi U/I, M12, Single Wire
16Bit, IP65/67, IO-Link V1.1, Class A

**Link to Product**

### Illustration



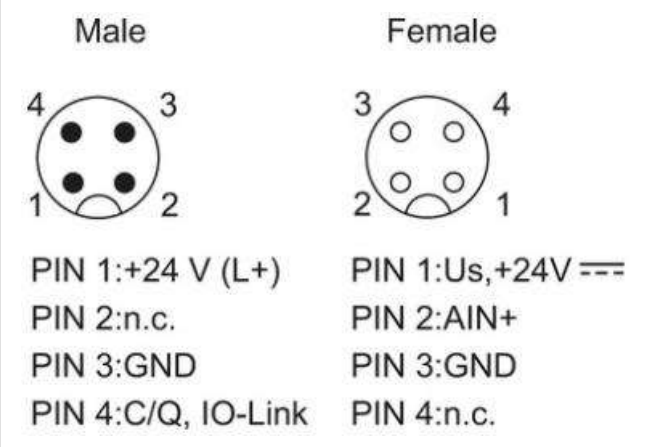


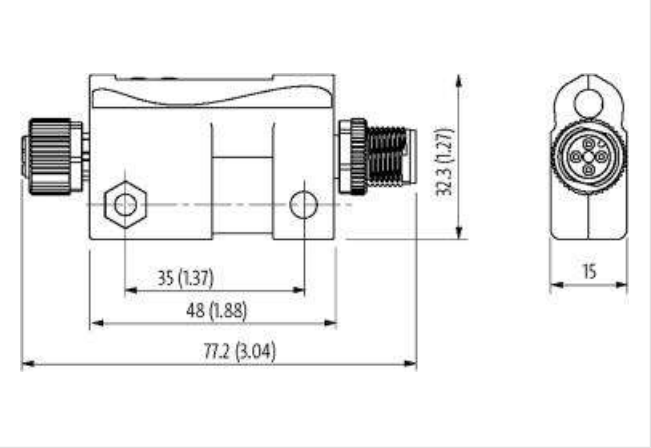


Product may differ from Image

### Commercial data

| | |
|---|---|
| ECLASS-6.1 | 27242602 |
| ECLASS-7.0 | 27242602 |
| ECLASS-8.0 | 27242602 |
| ECLASS-9.0 | 27242602 |
| ECLASS-10.1 | 27242602 |
| ECLASS-11.1 | 27242602 |

The information in this Product-PDF has been compiled with the utmost care.
Liability for the correctness completeness and topicality of the information is restricted to gross negligence. Version: 2024-02-02

MURR ELEKTRONIK
stay connected

| | |
|---|---|
| ECLASS-12.0 | 27242602 |
| customs tariff number | 85437090 |
| GTIN | 4048879797269 |
| Packaging unit | 1 |
| **Electrical data \| Supply** | |
| Operating voltage DC | 24 V |
| Operating voltage DC min. | 18 V |
| Operating voltage DC max. | 30 V |
| Norm operating voltage | EN 61131-2 |
| Operating voltage US DC | 24 V |
| Current consumption max. | 30 mA |
| **Electrical data \| Input** | |
| Parameterizable input averaging filter process data | yes |
| Current carrying capacity max. | 0,2 A |
| Conversion time with net suppression | OFF: 10 ms, 50 Hz: 60 ms, 60 Hz: 100 ms |
| **Industrial communication \| IO-Link** | |
| IO-Link process data length input | 2 Bytes |
| IO-Link revision ID | V1.1 |
| IO-Link cycle time min. | 2,3 ms |
| IO-Link transmission rate | COM2 (38.4 kbit/s) |
| Port Class | A |
| **Diagnostics** | |
| Diagnostic via IO-Link | yes |
| Diagnostic via LED | yes |
| IO-Link events | Device defect, Overtemperature, Overvoltage supply, Undervoltage supply, lower limit, upper limit |
| Short circuit diagnosis | yes |
| LED display | Ethernet connection/data traffic |
| Temperature control | yes |
| Overload diagnosis | yes |
| **Device protection \| Electrical** | |
| Degree of protection (EN IEC 60529) | IP65, IP67 |
| Short circuit protection sensor supply | yes |
| Invers-polarity protection | yes |
| Resistance to loads with regenerative power | yes |
| Over voltage protection | yes |
| **Mechanical data \| Material data** | |
| Material housing | Plastic |
| **Mechanical data \| Mounting data** | |
| Height | 32,3 mm |
| Width | 77,2 mm |
| Depth | 15 mm |
| **Environmental characteristics \| Climatic** | |
| Operating temperature min. | -30 °C |
| Operating temperature max. | 70 °C |
| Storage temperature min. | -40 °C |
| Storage temperature max. | 85 °C |
| **Connection type 2** | |
| Family construction form | M12 |
| Gender | female |
| Coding | A |

The information in this Product-PDF has been compiled with the utmost care.
Liability for the correctness completeness and topicality of the information is restricted to gross negligence. Version: 2024-02-02

| | |
|---|---|
| No. of poles | 4 |
| PIN 1 | 24 V DC (US) |
| PIN 2 | A + |
| PIN 3 | 0 V (Analog US) |
| PIN 4 | n.c. |
| Family construction form | M12 |
| Gender | male |
| Coding | A |
| No. of poles | 4 |
| PIN 1 | 24 V DC (L +) |
| PIN 2 | n.c. |
| PIN 3 | 0 V (L -) |
| PIN 4 | C / Q / IO-Link |

The information in this Product-PDF has been compiled with the utmost care.
Liability for the correctness completeness and topicality of the information is restricted to gross negligence. Version: 2024-02-02