

MAXI Blade Fuses



MAXI Sn Fuse (tin plated)

MAXI Blade Fuses Rated 32V

The MAXI® fuse uses "Diffusion Pill Technology" to provide predictable time delay characteristics and low heat dissipation.

Specification

	MAXI (Silver Plated)	MAXI Sn (Tin Plated)
Voltage Rating:	32 VDC32 VDC	
Interrupting Ratings:	1000A @ 32 VDC	1000A @ 32 VDC
*Component Level Temperature Range:	-40˚C to +125˚C	-40˚C to +105˚C
**System Level Temperature Range:	-40˚C to +105˚C	-40˚C to +85˚C
105°C and 85°C are typical system level temperature requirements.		
Terminals:	Ag plated zinc alloy	Sn plated zinc alloy
Housing Material:	PA66 PA66	
Complies with:	SAE J 1888, SAE 2576, ISO 8820-3:2002(E)	SAE J 1888, SAE 2576, ISO 8820-3:2002(E)

RoHS

Ordering Information

Part Number	Package Size
0299xxx.ZXNV	1200
0299xxx.L	50
0299xxx.TXN	10
MAXI Sn Fuse	
0299xxx.ZXT	1200

Time-Current Characteristics

% of Rating	Opening Time Min / Max (s)
100	360,000 s / –
135	60 s / 1,800 s
200	2 s / 60 s
350	0.20 s / 7 s
600	0.040 s / 1 s

Time-Current Characteristic Curves

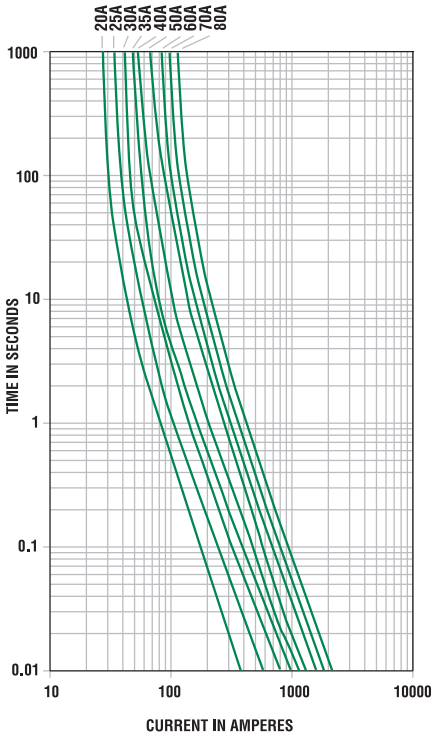

***Component Level Temperature** = the maximum ambient temperature that a single fuse will survive. This does not factor-in the heat from a populated fuse box, but does include the heat from the current load with the proper rerating. ****System Level Temperature** represents the ambient temperature of the fuse box at a location within the vehicle. The temperature within a populated fuse box (in a given location) will be higher. The limiting factor is the plating. Sn-plating's temperature limit is ≈130°C, and Ag-plating allows up to 150°C at the terminal interface.*

Ratings

Part Number	Current Rating (A)	Housing Material Color	Typ. Voltage Drop (mV)	Cold Resistance (mΩ)	I²t (A²s)
0299020._	20		76	3.10	1100
0299025._	25		75	2.39	2087
0299030._	30		77	1.95	4070
0299035._	35		75	1.71	6032
0299040._	40		75	1.42	8450
0299050._	50		73	1.10	11300
0299060._	60		77	0.89	15300
0299070._	70		61	0.64	21200
0299080._	80		62	0.54	43600

Dimensions

Dimensions in mm

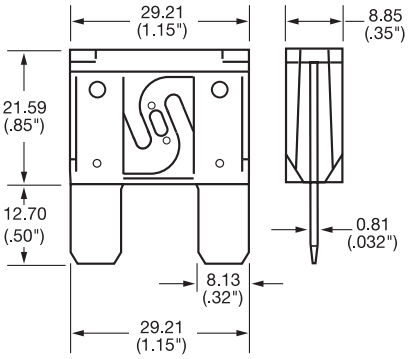

Temperature Rerating Curve

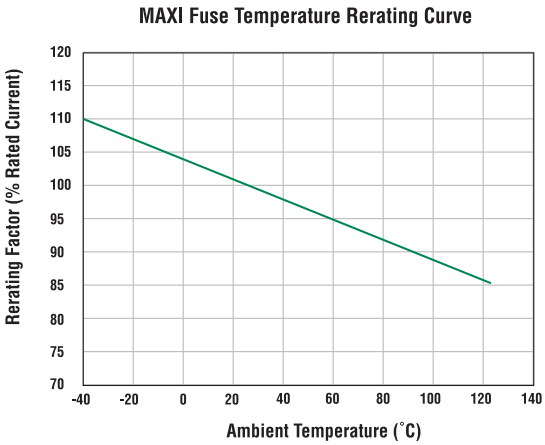

Littelfuse products are not designed for, and shall not be used for, any purpose (including, without limitation, automotive, military, aerospace, medical, life-saving, life-sustaining or nuclear facility applications, devices intended for surgical implant into the body, or any other application in which the failure or lack of desired operation of the product may result in personal injury, death, or property damage) other than those expressly set forth in applicable Littelfuse product documentation. Warranties granted by Littelfuse shall be deemed void for products used for any purpose not expressly set forth in applicable Littelfuse documentation. Littelfuse shall not be liable for any claims or damages arising out of products used in applications not expressly intended by Littelfuse as set forth in applicable Littelfuse documentation. The sale and use of Littelfuse products is subject to Littelfuse Terms and Conditions of Sale, unless otherwise agreed by Littelfuse.