Brand of NTN corporation

Technical data

EXFCE210

Bearing units



Grey cast housing, radial insert ball bearing with eccentric locking collar, seal with slinger

KIT CONTENT

EX.210.G2, FCE210

VISUAL (S)

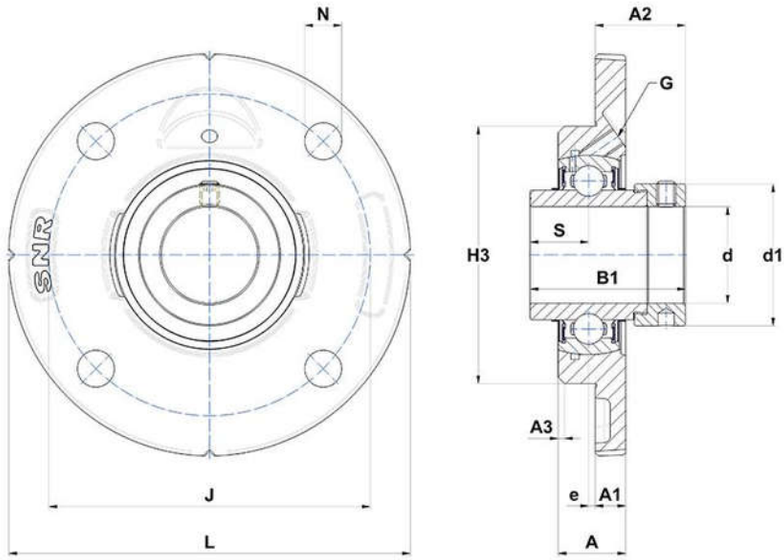

PRODUCT DEFINITION

Brand	SNR
A - Housing height	25,5 mm
A1 - Housing foot height / flange height	13 mm
A2 - Total height from mounting surface	37,1 mm
A3 - Centering depth / chamfer dimension	3 mm
B - Width of Inner Ring	49,2 mm

EXFCE210
Bearing units

PRODUCT DEFINITION	
B1 - Overall width Inner Ring	62,7 mm
d - Shaft diameter	50 mm
d1 - Outer dia of eccent. Lock. collar / nut of adapter sleeve	67,2 mm
e - Distance mounting surface to bearing center	-1 mm
G - Grease fitting	M8x1
H3 - Centering dia	110 mm
J - Mounting holes distance	135 mm
L - Housing width / diameter	165 mm
N - Mounting hole dimension	14 mm
S - Distance front side/bearing centre	24,6 mm

PRODUCT PERFORMANCE	
C - Dynamic load rating	35100000 mN
C0 - Static load rating	23200000 mN
Operating temperature min.	253,15 °K
Operating temperature max.	373,15 °K

OTHER FEATURES	
Mass	2,41 kg
Recommended tightening torque for set screw	11.5 N-m