1/4" DEEP 6-POINT SOCKETS - METRIC | E113759



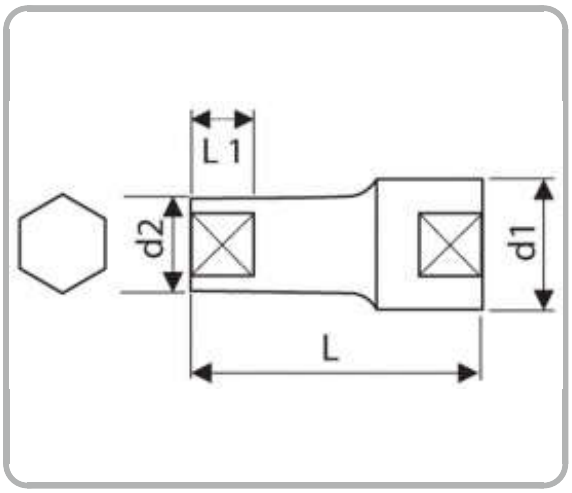

Description

- ISO 2725-1 - DIN 3124 - ISO 1174-1 - ISO 1711-1 - ISO 691
- Chrome vanadium steel.
- OGV Profile: tightening torque applied to the sides rather than to the angles of the nut.
- High chrome finish.
- For manual use.

Information

EAN	3258951137598
A [mm]	11
d1 [mm]	15.6
d2 [mm]	15.6
L [mm]	49,5
L1 [mm]	14
Conditioning	10
[g]	15