E40160

Clamp fitting for process sensors

CLAMP ADAPTER R1/2

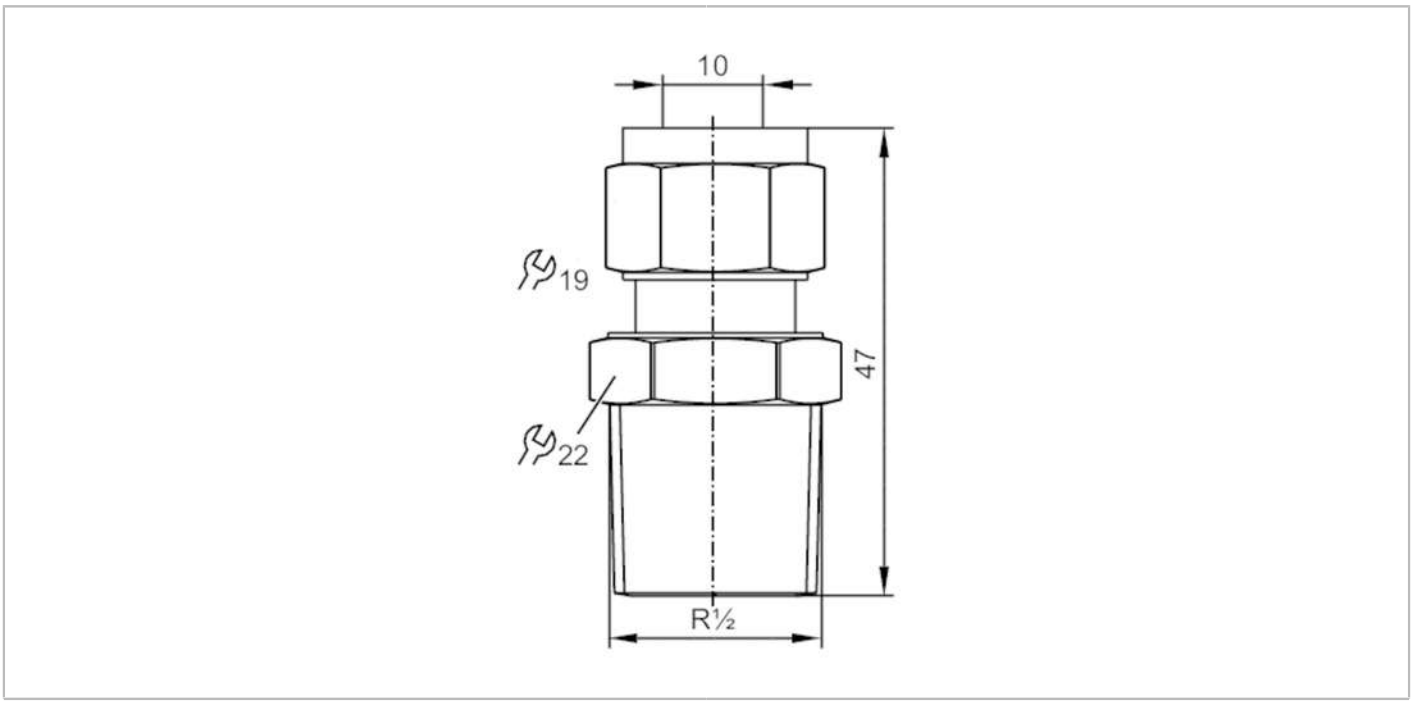

Reg31

Application		
Design		for flow sensors Ø 10 mm
Application		for industrial applications
Installation		Clamp fitting
Media		liquids and gases
Pressure rating	[bar]	300
Operating conditions		
Ambient temperature	[°C]	-25...80
Tests / approvals		
Pressure Equipment Directive		A possible classification to PED depends on the application and has to be carried out by the user / operator.
Pressure Equipment Directive EAC		The adapter is intended for use in devices, machines and installations that do not fall under the categories of the technical rule TR CU 032/2013.
Safety instructions		The compatibility between medium and product material has to be checked in all applications.
Mechanical data		
Weight	[g]	80
Materials		stainless steel
Sensor connection		Ø 10 mm
Process connection		threaded connection R 1/2
Remarks		
Pack quantity		1 pcs.