DATASHEET - P3-100/SE3/SVB



Main switch, P3, 100 A, surface mounting, 3 pole, Emergency switching off function, With red rotary handle and yellow locking ring, Lockable in the 0 (Off) position, in steel enclosure

Part no. P3-100/SE3/SVB
Catalog No. 197370

Delivery program

Product range			Main switch maintenance switch Repair switch
Part group reference			P3
Stop Function			Emergency switching off function
			With red rotary handle and yellow locking ring
Information about equipment supplied			Auxiliary contact or neutral conductor fitted by user.
Notes			in steel enclosure
Number of poles			3 pole
Auxiliary contacts			
		N/O	0
		N/C	0
Locking facility			Lockable in the 0 (Off) position
Degree of Protection			IP65
			totally insulated
Design			surface mounting
			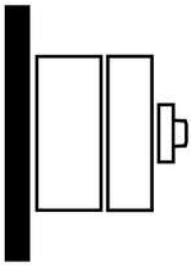
Contact sequence			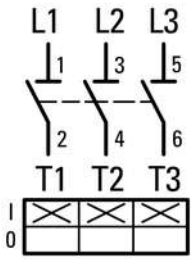
Switching angle		°	90
Function			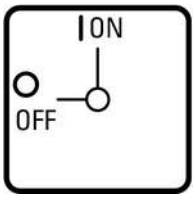
Motor rating AC-23A, 50 - 60 Hz			
400 V	P	kW	55
Rated uninterrupted current	I_u	A	100
Note on rated uninterrupted current I_u			Rated uninterrupted current I_u is specified for max. cross-section.

Technical data

General

Standards			IEC/EN 60947, VDE 0660, IEC/EN 60204 Switch disconnector in accordance with IEC/EN 60947-3
Ambient temperature			
Enclosed		°C	-25 - +40
Overvoltage category/pollution degree			III/3
Rated impulse withstand voltage	U_{imp}	V AC	6000
Mechanical shock resistance		g	15
Mounting position			As required

Contacts

Mechanical variables			
Number of poles			3 pole
Auxiliary contacts			
		N/O	0
		N/C	0
Electrical characteristics			
Rated operational voltage	U_e	V AC	690
Rated uninterrupted current	I_u	A	100
Note on rated uninterrupted current I_u			Rated uninterrupted current I_u is specified for max. cross-section.
Load rating with intermittent operation, class 12			
AB 25 % DF		x I_e	2
AB 40 % DF		x I_e	1.6
AB 60 % DF		x I_e	1.3
Short-circuit rating			
Fuse		A gG/gL	100
Rated short-time withstand current (1 s current)	I_{cw}	A_{rms}	2000
Note on rated short-time withstand current Icw			Current for a time of 1 second
Rated conditional short-circuit current	I_q	kA	4

Switching capacity

cos φ rated making capacity as per IEC 60947-3		A	950
Rated breaking capacity cos φ to IEC 60947-3		A	
230 V		A	760
400/415 V		A	740
500 V		A	880
690 V		A	520
Safe isolation to EN 61140			
between the contacts		V AC	440
Current heat loss per contact at I_e		W	7.5
Lifespan, mechanical	Operations	x 10^6	> 0.1
Maximum operating frequency	Operations/h		1200
AC			
AC-3			
Rating, motor load switch	P	kW	
220 V 230 V	P	kW	22
400 V 415 V	P	kW	37
500 V	P	kW	45
690 V	P	kW	37
Rated operational current motor load switch			
230 V	I_e	A	71
400V 415 V	I_e	A	71
500 V	I_e	A	65
690 V	I_e	A	23.8
AC-21A			
Rated operational current switch			

440 V	I_e	A	100
AC-23A			
Motor rating AC-23A, 50 - 60 Hz	P	kW	
230 V	P	kW	30
400 V 415 V	P	kW	55
500 V	P	kW	55
690 V	P	kW	55
Rated operational current motor load switch			
230 V	I_e	A	100
400 V 415 V	I_e	A	100
500 V	I_e	A	96
690 V	I_e	A	68
DC			
DC-1, Load-break switches L/R = 1 ms			
Rated operational current	I_e	A	100
Voltage per contact pair in series		V	60
DC-23A, motor load switch L/R = 15 ms			
24 V			
Rated operational current	I_e	A	50
Contacts		Quantity	1
48 V			
Rated operational current	I_e	A	50
Contacts		Quantity	2
60 V			
Rated operational current	I_e	A	50
Contacts		Quantity	2
120 V			
Rated operational current	I_e	A	25
Contacts		Quantity	3
Control circuit reliability at 24 V DC, 10 mA	Fault probability	H_F	$< 10^{-5}$,< 1 failure in 100,000 switching operations

Terminal capacities

Solid or stranded		mm^2	1 x (2,5 - 35) 2 x (2,5 - 10)
Flexible with ferrules to DIN 46228		mm^2	1 x (1.5 - 25) 2 x (1.5 - 6)
Tightening torque for terminal screw		Nm	3

Technical safety parameters:

Notes			$B10_d$ values as per EN ISO 13849-1, table C1

Technical data ETIM 7.0

Low-voltage industrial components (EG000017) / Switch disconnector (EC000216)

Electric engineering, automation, process control engineering / Low-voltage switch technology / Off-load switch, circuit breaker, control switch / Switch disconnector (ecl@ss10.0.1-27-37-14-03 [AKF060013])

Version as main switch			Yes
Version as maintenance-/service switch			Yes
Version as safety switch			Yes
Version as emergency stop installation			Yes
Version as reversing switch			No
Number of switches			1
Max. rated operation voltage Ue AC		V	690
Rated operating voltage		V	690 - 690
Rated permanent current Iu		A	100
Rated permanent current at AC-23, 400 V		A	100
Rated permanent current at AC-21, 400 V		A	100
Rated operation power at AC-3, 400 V		kW	37

Rated short-time withstand current Icw	kA	2
Rated operation power at AC-23, 400 V	kW	55
Switching power at 400 V	kW	55
Conditioned rated short-circuit current Iq	kA	4
Number of poles		3
Number of auxiliary contacts as normally closed contact		0
Number of auxiliary contacts as normally open contact		0
Number of auxiliary contacts as change-over contact		0
Motor drive optional		No
Motor drive integrated		No
Voltage release optional		No
Device construction		Complete device in housing
Suitable for ground mounting		Yes
Suitable for front mounting 4-hole		No
Suitable for front mounting centre		No
Suitable for distribution board installation		No
Suitable for intermediate mounting		No
Colour control element		Red
Type of control element		Door coupling rotary drive
Interlockable		Yes
Type of electrical connection of main circuit		Screw connection
Degree of protection (IP), front side		IP65
Degree of protection (NEMA)		Other

Dimensions

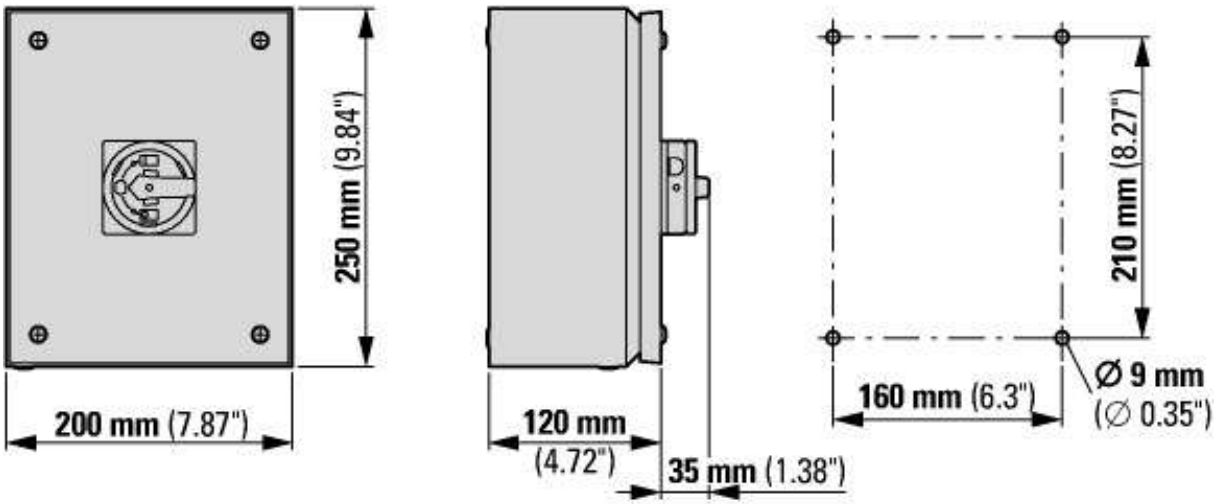

Additional product information (links)

Switch disconnector in steal enclosure	
Switch disconnector in steal enclosure	ftp://ftp.moeller.net/DOCUMENTATION/AWA_INSTRUCTIONS/IL008056ZU2018_12.pdf
Technical overview cam switch, switch-disconnector	http://de.ecat.moeller.net/flip-cat/?edition=HPLTEv1&startpage=4.2
System overview cam switch T	http://de.ecat.moeller.net/flip-cat/?edition=HPLTEv1&startpage=4.4
System overview switch-disconnector P	http://de.ecat.moeller.net/flip-cat/?edition=HPLTEv1&startpage=4.6
Key to part numbers Cam switch	http://de.ecat.moeller.net/flip-cat/?edition=HPLTEv1&startpage=4.8
Key to part numbers Switch-disconnector	http://de.ecat.moeller.net/flip-cat/?edition=HPLTEv1&startpage=4.8
Switches for ATEX	http://www.coopercrouse-hinds.eu/en/products/25-ex-safety-and-main-current-switches.html

© 07/2020 by Eaton Industries GmbH