SES® strain relief bushes DM

in Polyamide 6 black and white

for torsional protection

DM-SES®

DM-SES

Material: polyamide 6
Colours: black - white
Operating temperature: -20 to +70°C
Tensile strength at break: 80 MPa
Ultimate elongation: > 50%
Dielectric strength: 60 kV/mm
Flame resistance: V2 UL94 (internal test)

Application: for passing a cable through a wall with cable clamp.

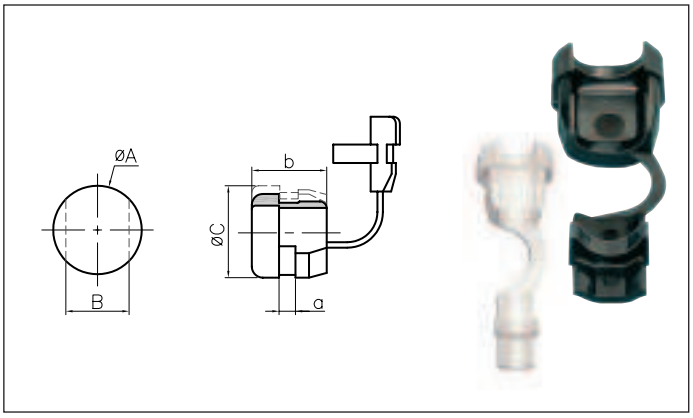

type	art. no. black	art. no. white	dimensions of the cables (mm) Ø PVC insulation	dimensions of the cables (mm) Ø rubber insulation	dimensions (mm) bore Ø A	B	a	b	Ø C	
	010	001								
round cables										
DM 2	0131 0012 010	0131 0012 001	3 ... 4,5	3 ... 4,5	9,5	8,5	1,7	10,3	11	100
DM 2L	0131 0032 010	0131 0032 001	3 ... 4,5	3 ... 4,5	9,5	8,5	3,1	10,3	11	100
DM 4	0131 0001 010	0131 0001 001	5 ... 6,5	5 ... 7	13	11,5	2,5	12	14	100
DM 5	0131 0010 010	0131 0010 001	6,5 ... 7,5	6,5 ... 7,5	13	11,5	2,5	11	14	100
DM 6	0131 0002 010	0131 0002 001	6,6 ... 8	7,1 ... 9	16	14	3,5	17	18	100
DM 7	0131 0003 010	0131 0003 001	8,1 ... 10	9,1 ... 11	22,5	21	3,2	20	25	100
DM 8	0131 0004 010	0131 0004 001	10,1 ... 12,5	11,1 ... 14	22,5	21	3,6	22	22	100
			H x W	H x W	Ø A	B	a	b	Ø C	
flat cables										
DM 2P	0131 0022 010	0131 0022 001	3 x 5	3 x 5	9,5	8,5	1,7	10,3	11	100
DM 2LP	0131 0042 010	0131 0042 001	3 x 5	3 x 5	9,5	8,5	3,1	10,3	11	100
DM 4P	0131 0020 010	0131 0020 001	3 x 7,6	3,8 x 7,1	13	11,5	2,8	10,5	14	100
DM 6P	0131 0021 010	0131 0021 001	5 x 9	5 x 9	16	14	3	17	18	100

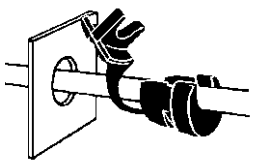

Round bore (ØA)
For torsional protection of strain relief grommets, an oblong bore (B) is required.

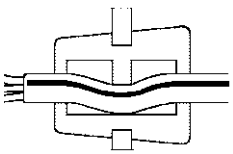

principle of cable clamping

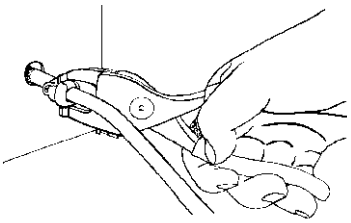

• DM application tool

Rack and pinion pliers with adjustable jaws to apply all types of strain relief grommets DM-SES for small or mid-sized series.

type	article number	characteristics length (mm)	characteristics weight (g)	
R 29	0655 0001 000	180	270	1

