MURR ELEKTRONIK
stay connected

M12 male 0°/M12 female 0° shielded B-cod.Profibus

PUR 1x2xAWG24 shielded vt UL/CSA+dragchain 5m

PROFIBUS
Male straight – female straight
M12, 4-pole – M12, 2-pole
B-coded
shielded
Plastic housings with good resistance against chemicals and oils.
The resistance to aggressive media should be individually tested for your application. Further details on request.
Further cable lengths on request.

Link to Product

Illustration

The information in this brochure has been compiled with the utmost care.
Liability for the correctness completeness and topicality of the information is restricted to gross negligence. Version: 05/21

MURR ELEKTRONIK
stay connected



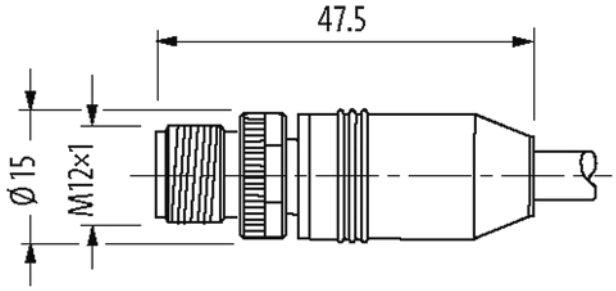

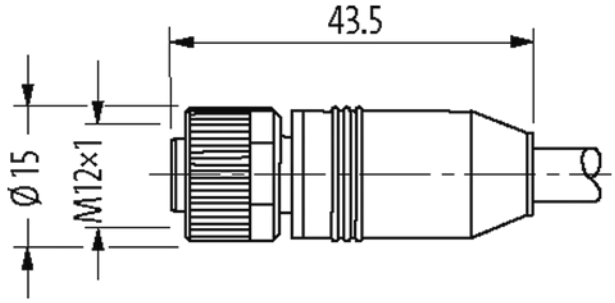

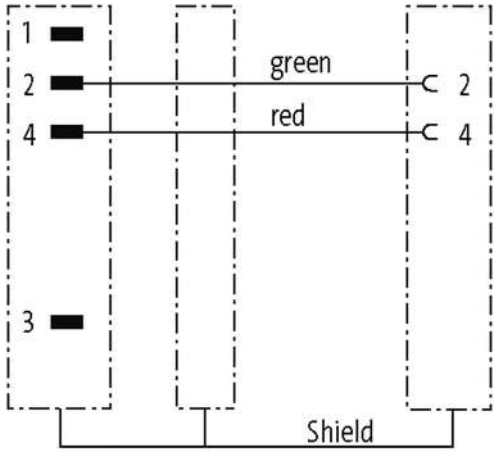

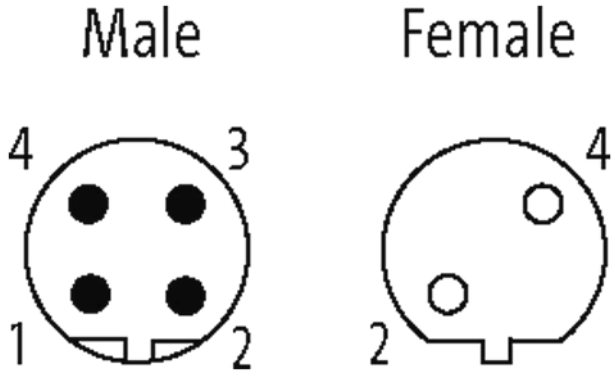

Product may differ from Image

Approvals

The information in this brochure has been compiled with the utmost care.
Liability for the correctness completeness and topicality of the information is restricted to gross negligence. Version: 05/21

MURR ELEKTRONIK
stay connected

cCSAus

c UL us Listed *

* only for products with UL/CSA approved cable

More Info

PROFIBUS

Form

Form	44001

Technical Data

Operating voltage	max. 60 V AC/DC
Operating voltage (only UL listed)	max. 30 V AC/DC
Rated surge voltage	1.5 kV
Operating current per contact	max. 4 A
Material group	IEC 60664-1, category I
Coding	B-coded
Locking of ports	Screw thread (M12×1 mm) recommended torque 0.6 Nm, self-securing
Compression gland	M12 (SW13)
Protection	IP65, IP66K, IP67 inserted and tightened (EN 60529)
Locking material	Zinc die casting, matte nickel plated
Material	PUR
suitable for corrugated tube (internal Ø)	without

General data

Standards	DIN EN 61076-2-101 (M12)
Mounting method	inserted, tightened
Pollution Degree	3
Temperature range	-25...+85 °C, depending on cable quality

Cables

No./diameter of wires	1× 2× 0.25 mm²
Wire isolation	PE (rd, gn)
C-track properties	10 Mio.
Jacket Color	violet
Material (jacket)	PUR (UL/CSA)
Outer Ø	7.8 mm ±5%
Bend radius (moving)	12× outer Ø
Temperature range (fixed)	-40...+80 °C
Temperature range (mobile)	-20...+60 °C
Cable identification	840
Approval (cable)	UL (AWM-Style 20236/1589), CSA; CE
Cable weight [g/m]	82,50
Material (wire)	Cu wire, bare
Resistor (core)	max. 78 Ω/km (20 °C)
Single wire Ø (core)	0.127 mm
Construction (core)	19× 0.127 mm
Diameter (core)	1× 2× 0.25 mm²
AWG	similar to AWG 24
Material (wire isolation)	PE
Wire-Ø incl. isolation	2.55 mm ±5%
Color/numbering of wires	rd, gn

The information in this brochure has been compiled with the utmost care.
Liability for the correctness completeness and topicality of the information is restricted to gross negligence. Version: 05/21

Stranding combination	2 wires twisted
Shield	yes
optical shield cover	min. 70%
Material (jacket)	PUR
Outer-Ø (jacket)	7.8 mm ±5%
Color (jacket)	violet
chemical resistance	good resistance to oil, gasoline and chemicals
thermal resistance	flame retardant
Nominal voltage	250 V
Temperature range (fixed)	-40...+80 °C
Temperature range (mobile)	-20...+60 °C
Bend radius (fixed)	10× outer Ø
Bend radius (moving)	12× outer Ø
No. of bending cycles (C-track)	max. 10 Mio. (25 °C)
Traversing distance (C-track)	max. 5 m (horizontal)
Travel speed (C-track)	max. 3 m/s
Acceleration (C-track)	max. 5 m/s²

Commercial data

country of origin	DE
customs tariff number	85444290
EAN	4048879142342
eClass	27061801
Packaging unit	1

The information in this brochure has been compiled with the utmost care.
Liability for the correctness completeness and topicality of the information is restricted to gross negligence. Version: 05/21