F64G - Olympian Plus Plug-In System
General purpose filter



- **Port size: 1/4" ... 3/4" (ISO G/PTF)**
- **Effective liquid removal and positive solid filtration**
- **Large filter element area for minimum pressure drop**
- **Quick release bayonet bowl**

Technical features

Medium:
Compressed air only
Maximum operating pressure:
17 bar (246 psi)
Filter element:
40 µm (standard) 5 µm (optional)
Flow:
See diagrams on page 2
Port sizes:
1/4", 3/8", 1/2" or 3/4"
Drain:
Manual or automatic

Automatic drain conditions:
Pressure to close drain:
> 0,3 bar (4.3 psi)
Pressure to open drain:
< 0,2 bar (2.9 psi)
Minimum air flow to close drain:
0,6 dm^3/s (1.3 scfm)
Service life indicator:
Without (standard)
With on request
Bowl size:
0,2 litre (7 fluid oz)

Standard compliances:
II 2G Ex h IIC T6 Gb
II 2D Ex h IIIC T85° Db
Ambient/Media temperature:
-20° ... +80°C (-4° ... +176°F)
Air supply must be dry enough to avoid ice formation at temperatures below +2°C (+35°F).

Materials:
Body and yoke: Zinc alloy
Connection piece: Aluminium
Metal bowl: Aluminium
Prismatic liquid level indicator: Grilamid
Filter element: Sintered plastic
Element: Sintered bronze or plastic
Elastomers: NBR

Technical data, standard models

Symbol	Port size	Size	Filter element (µm)	Flow * (dm^3/s)	Bowl	Drain	Weight (kg)	Model
	G1/4	–	40	33	Metal	Manual	1,42	F64G-2GN-MD3
	G3/8	–	40	66	Metal	Manual	1,42	F64G-3GN-MD3
	G1/2	Basic	40	75	Metal	Manual	1,32	F64G-4GN-MD3
	G3/4	–	40	75	Metal	Manual	1,72	F64G-6GN-MD3
	Without yoke	–	40	–	Metal	Manual	0,92	F64G-NNN-MD3
	G1/4	–	40	33	Metal	Automatic	1,42	F64G-2GN-AD3
	G3/8	–	40	66	Metal	Automatic	1,4	F64G-3GN-AD3
	G1/2	Basic	40	75	Metal	Automatic	1,37	F64G-4GN-AD3
	G3/4	–	40	75	Metal	Automatic	1,73	F64G-6GN-AD3
	Without yoke	–	40	–	Metal	Automatic	0,94	F64G-NNN-AD3

* Typical flow with 10 bar (145 psi) inlet pressure, and 6,3 bar (91 psi) set pressure and 0,5 bar (7.2 psi) drop from set.

Option selector

F64G-★★★-★D★

Port size	Substitute
1/4"	**2**
3/8 "	**3**
1/2 "	**4**
3/4"	**6**
Without yoke (standard)	**N**
Threads form	**Substitute**
PTF	**A**
ISO G (standard)	**G**
Without yoke (standard)	**N**

Element	Substitute
5 µm	**1**
40 µm (standard)	**3**
Drain	**Substitute**
Automatic	**A**
Manual	**M**
Service life indicator	**Substitute**
Mechanical	**D**
Without (standard)	**N**

Our policy is one of continued research and development. We therefore reserve the right to amend, without notice, the specifications given in this document. (1997 - 8070d) © 2015 IMI International s.r.o.

Flow characteristics

Port size: 1/2"; Filter element 40 µm

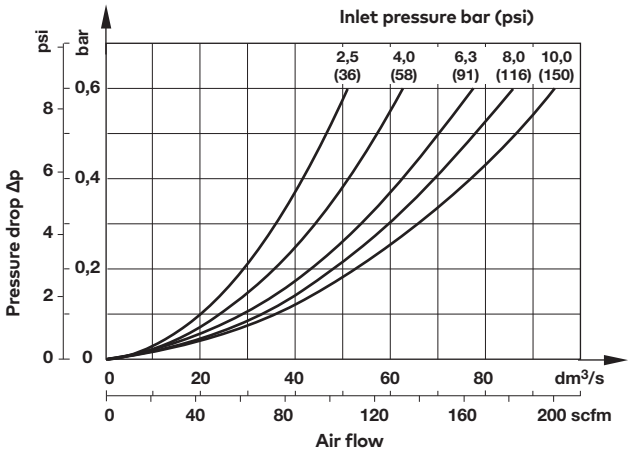

Our policy is one of continued research and development. We therefore reserve the right to amend, without notice, the specifications given in this document. (1997 - 8070d) © 2015 IMI International s.r.o.

Accessories and service kit



Accessories

Thread	Models with G-thread Single yoke  5	Double yoke 	3/2 Shut-off valve Threaded inlet only 	Threaded outlet only 	End connector kit  2	Rear entry bracket kit  8
G1/4	Y64A-2GA-N1N	Y64A-2GA-N2N	T64T-2GB-P1N	T64T-2GC-P1N	–	–
G3/8	Y64A-3GA-N1N	Y64A-3GA-N2N	T64T-3GB-P1N	T64T-3GC-P1N	–	–
G1/2	Y64A-4GA-N1N	Y64A-4GA-N2N	T64T-4GB-P1N	T64T-4GC-P1N	74505-50	–
G3/4	Y64A-6GA-N1N*	Y64A-6GA-N2N*	T64T-6GB-P1N	T64T-6GC-P1N	74505-53	18-026-981
1/4 PTF	Y64A-2AA-N1N	Y64A-2AA-N2N	T64T-2AB-P1N	T64T-2AC-P1N	–	–
3/8 PTF	Y64A-3AA-N1N	Y64A-3AA-N2N	T64T-3AB-P1N	T64T-3AC-P1N	–	–
1/2 PTF	Y64A-4AA-N1N	Y64A-4AA-N2N	T64T-4AB-P1N	T64T-4AC-P1N	74505-52	–
3/4 PTF	Y64A-6AA-N1N*	Y64A-6AA-N2N*	T64T-6AB-P1N	T64T-6AC-P1N	74505-55	–

*These yokes are supplied with two end connenctor kits as standard.

Bracket mounting  1	Nut  4	Yoke connector kit  9	Porting block 	Padlock with two keys 
74504-50	74502-89	74503-51	74507-50	0613633 (brass)

Service kit

Service kit Automatic drain 	Service kit Manual drain 
F64G-KITA40	F64G-KITM40

Our policy is one of continued research and development. We therefore reserve the right to amend, without notice, the specifications given in this document. (1997 - 8070d) © 2015 IMI International s.r.o.

Basic dimensions

Dimensions in mm
Projection/First angle

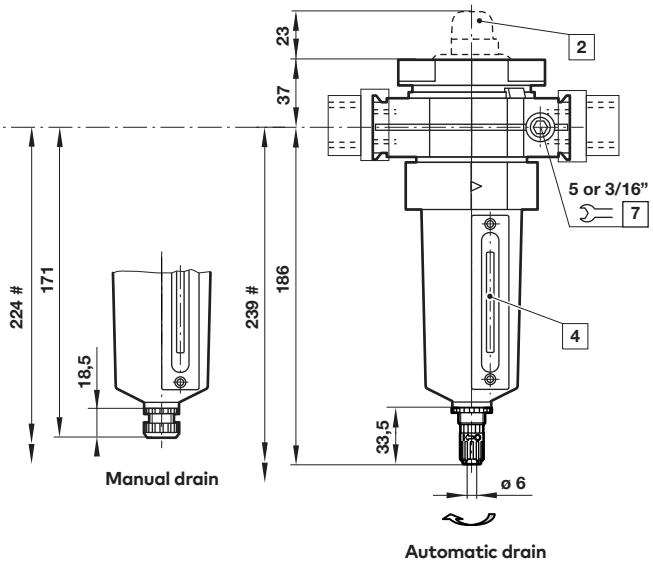

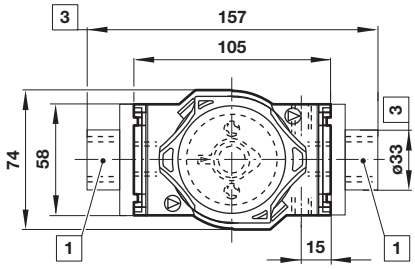

Minimum clearance required to remove bowl
1 Main ports 1/4", 3/8", 1/2" or 3/4"
2 Service indicator optional
3 For main ports 3/4" only
4 Sight glass
7 Gauge port 1/8"

Single yoke with bracket mounting

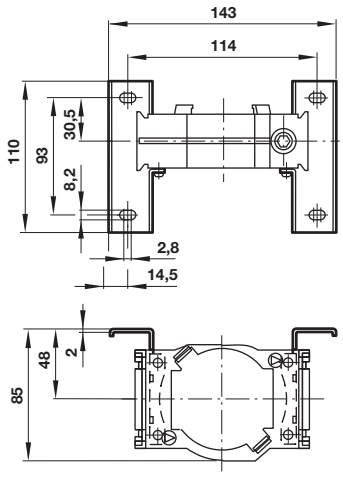

Double yoke with bracket mounting

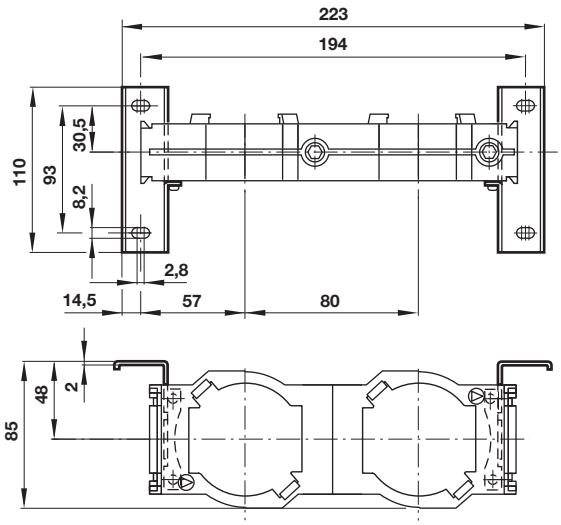

Our policy is one of continued research and development. We therefore reserve the right to amend, without notice, the specifications given in this document. (1997 - 8070d) © 2015 IMI International s.r.o.

Rear entry bracket
18-026-981

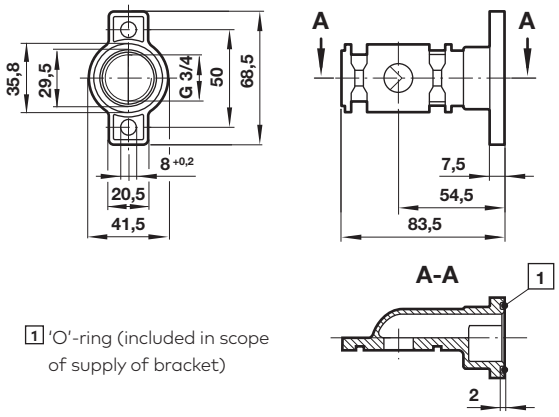

1 'O'-ring (included in scope of supply of bracket)

Porting block
74507-50

Dimensions in mm
Projection/First angle

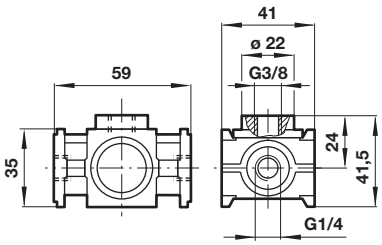

3/2 Shut-off valve

Symbol	A	B	ø C	Model
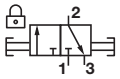	G1/4	48	27	T64T-2G*-P1N
	G3/8	48	27	T64T-3G*-P1N
	G1/2	48	27	T64T-4G*-P1N
	G3/4	51	33	T64T-6G*-P1N

* B = Threaded inlet only, C = Threaded outlet only

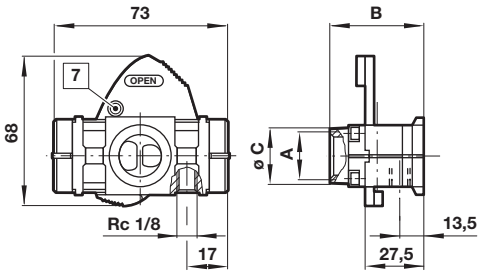

7 Padlock hole ø7,5 mm

Warning

These products are intended for use in industrial compressed air systems only. Do not use these products where pressures and temperatures can exceed those listed under **»Technical features/data«**.
Before using these products with fluids other than those specified, for non-industrial applications, life-support systems or other applications not within published specifications, consult IMI Precision Engineering.
Through misuse, age, or malfunction, components used in fluid power systems can fail in various modes.
The system designer is warned to consider the failure modes of all component parts used in fluid power systems and to provide adequate safeguards to prevent personal injury or damage to equipment in the event of such failure.
System designers must provide a warning to end users in the system instructional manual if protection against a failure mode cannot be adequately provided.
System designers and end users are cautioned to review specific warnings found in instruction sheets packed and shipped with these products.

Our policy is one of continued research and development. We therefore reserve the right to amend, without notice, the specifications given in this document. (1997 - 8070d) © 2015 IMI International s.r.o.