PENKO Engineering BV

The Leading Experts In Weighing & Dosing

Loadcell Junction Box

- Summing 2, 3 or 4 load cells.
- PCB with connectors and trim capability.
- 4 potentiometers for corner trim applications.
- Strain relief cable fittings.
- Protection IP 66.
- Optional: Suitable for " EX " areas.
- Enclosure: Reinforced fiberglass polyester.
- Dimensions (L x W x H) 160x75x55 mm (cable fittings not included).
- Color grey.

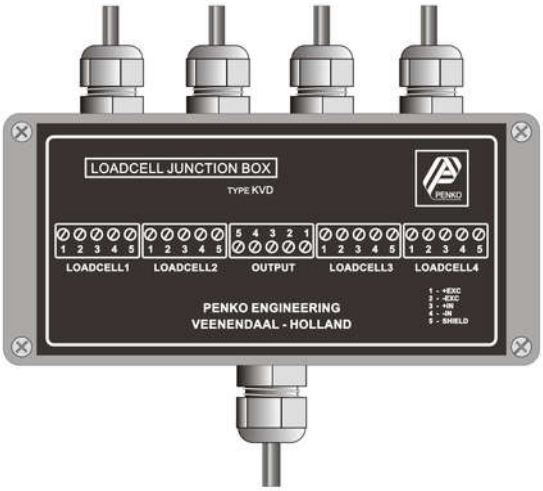

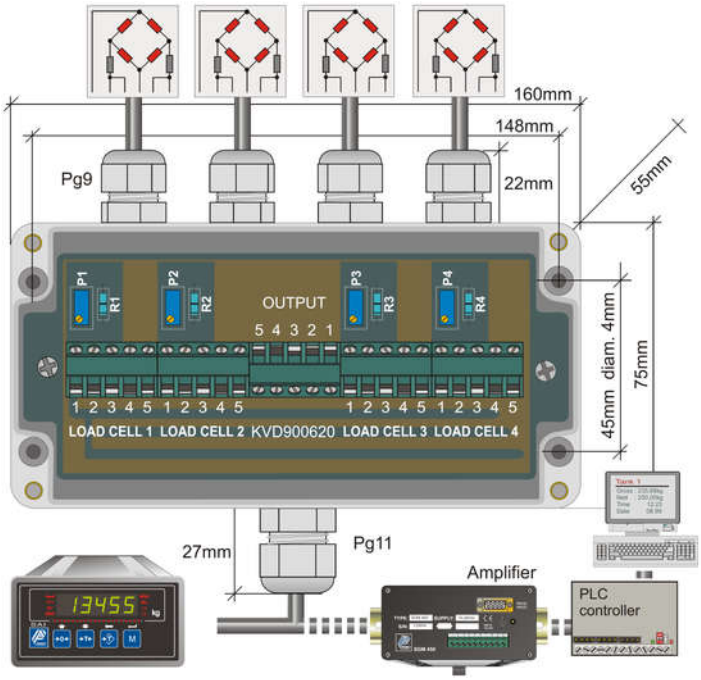

Inputs	: up to 4 load cells. cable diameter < 9mm
Output	: one cable fitting, cable diameter < 11 mm
Cable fittings	: 4 x PG9 to the load cells, 1 x PG11 to the indicator.
Terminal blocks	: Terminal 1 + Excitation
	Terminal 2 - Excitation
	Terminal 3 + Signal
	Terminal 4 - Signal
	Terminal 5 Shield.
Trim potentiometer	: 0 - 20 Ohm, 25 turn precision potentiometer.
Protection	: IP 66. Inside -O- ring type sealing.
Enclosure	: Reinforced fiberglass polyester.
Dimensions	: W x H x D - 160 x 75 x 55 .(cable fittings not included)
Option: (On request)	: aluminum, stainless steel or suitable for "EX" areas.

PENKO Engineering B.V. | Schutterweg 35, 6718 XC Ede | The Netherlands | Tel 0031 (0)318 525630 | Fax 0031 (0)318 529715
info@penko.com | **www.penko.com**
All product information and specifications are subject to change without prior notice. Copyright © 2011 PENKO. All Rights Reserved.
Updated 08/13