Foot-switch Protective guard
Series F2

Description **F2-UN-HAUBE M.FKZ KOMP.**	Article number **3906020720**

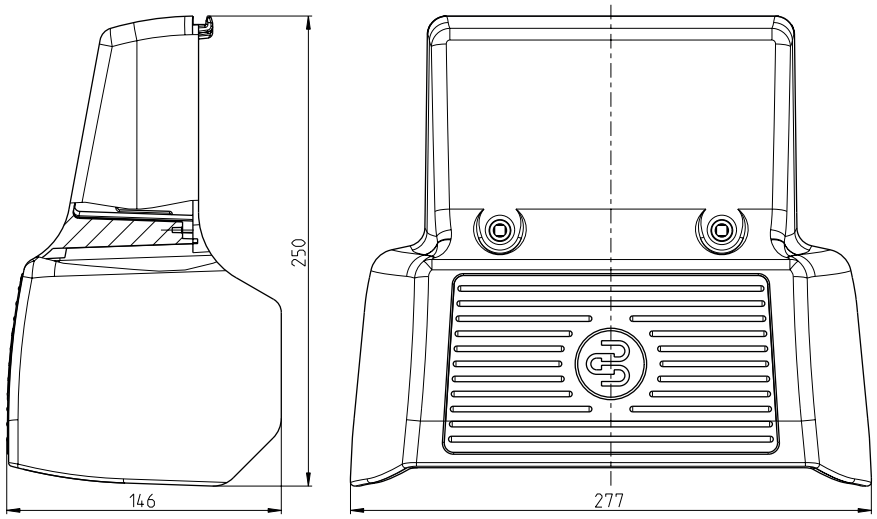

Mechanical data	
Protective hood	Die-cast aluminium, colour: RAL 3016 (coral red)
Gasket	NBR
Screw	2 x M6 screw (galvanized)

Application
Suitable for the corresponding BERNSTEIN foot switches series F2.