Relay : 1 NO high level contacts 10 mA to 5 A - 9 mm *.354*" spacing



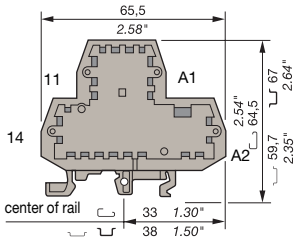

M 4/9.R111...

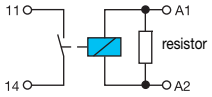

M 4/9.R111

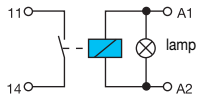

M 4/9.R111L

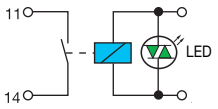

M 4/9.R111L

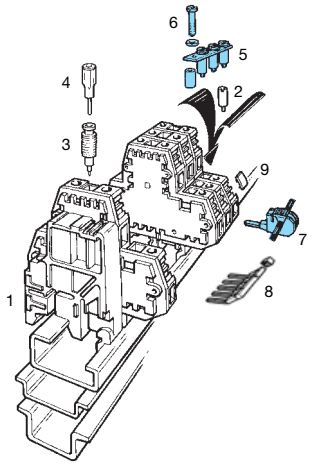

Characteristics

Relay characteristics	M 4/9.R111		M 4/9.R111L		M 4/9.R111L	
COIL						
Rated voltage +20%, -20% on DC	12 V	24 V	12 V	24 V	12 V	24 V
Frequency						
Power	0.3 W	0.3 W	0.6 W	0.8 W	0.25 W	0.31 W
Rated current	24 mA	14 mA	52 mA	33 mA	21 mA	13 mA
Drop-out voltage at 20°C	1.2 V DC	2.4 V DC	1.2 V	2.4 V	1.2 V	2.4 V
Allowable leakage current	2 mA	1 mA	4 mA	3 mA	1.5 mA	0.7 mA
Status device			lamp		green LED	
CONTACT						
Type	1 NO					
Voltage switching range min./max.	12 V / 150 V DC - 250 V AC					
Current switching range	10 mA / 5 A					
Load switching range						
AC1 min. / max.	0.6 VA / 1250 VA					
DC1 min. / max.	0.6 W / 150 W					
Number of on-load operations	1×10^6					
Number of off-load operations	2×10^7					
Pull-in time (delay time)	5 ms					
Drop-out time (delay time)	6 ms		7 ms		6 ms	
Bounce time	4 ms					
Insulation coil / contacts	3000 V RMS				2500 V RMS	
Breakdown voltage with 1.2/50µ wave	4000 V RMS					
Insulation contacts/contacts	750 V RMS					
Storage ambient temperature	-40°C to +80°C					
Operating ambient temperature	See derating curve hereunder					
Other characteristics						
Body material grey	UL 94 V0					
Wire Solid wire	0.2-4 mm² / 22-12 AWG					
size Stranded wire	0.22-2.5 mm² / 22-12 AWG					
Rated wire size	2.5 mm² / 12 AWG					
Wire stripping length	9 mm *.354*"					
Recommended screwdriver	3.5 mm *.137*"					
Protection	IP 20 *NEMA 1*					
Recommended torque	0.4-0.6 Nm *3.5-5.3 lb.in*					
Approvals	c UL us - CE				c UL us pending - CE	
Reference standards	CEI 947-7-1 / CEI 947-1 / CEI 1131-2 (in relevant parts) / CEI 60664-1 / CEM : IRC 1000-4-2, 3, 4, 5, 6.					

Derating curve

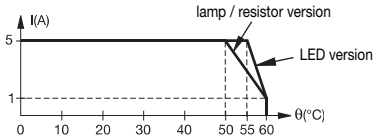

M 4/9.R111...

Order codes

Description	Type	Order P/N	Packaging	Weight kg
Relay module 1 NO high level	M 4/9.R111-12VDC	1SNA **607 029** R**01**00	10	0.02
Relay module 1 NO high level	M 4/9.R111-24VDC	1SNA **607 030** R**06**00	10	0.02
Relay module with lamp 1NO high level protected against leakage current	M 4/9.R111L-12VDC	1SNA **607 001** R**06**00	10	0.02
Relay module with lamp 1NO high level protected against leakage current	M 4/9.R111L-24VDC	1SNA **607 002** R**07**00	10	0.02
Relay module with LED 1 NO high level	M 4/9.R111L-12VDC	1SNA **607 051** R**07**00	10	0.02
Relay module with LED 1 NO high level	M 4/9.R111L-24VDC	1SNA **607 052** R**00**00	10	0.02

Accessories

1 High end stop (all rails)		BAMH 9,1 mm	1SNA **114 836** R**00**00	50
2 Test socket	DIA. 2 mm	AL2 (1)	1SNA **163 070** R**00**00	50
	DIA. 3 mm	AL3 (1)	1SNA **163 261** R**00**00	50
3 Test device	grey	DCG	1SNA **163 218** R**05**00	10
4 Test plug		FC2	1SNA **007 865** R**26**00	10
5 Jumper bar	8 poles	BJS9 (1)(2)	1SNA **177 583** R**12**00	25
not assembled	16 poles	BJS9 (1)(2)	1SNA **177 584** R**13**00	25
6 Sub-assembly for jumper bar (screw + jumper + post)		EV6D (1)(2)	1SNA **168 400** R**16**00	20
7 IDC jumper		AD2,5	1SNA **114 205** R**20**00	50
8 Comb type jumper bar		PC9	1SNA **210 160** R**12**00	10
9 Marking method		RC65 and RC610	see marking	

(1) These accessories can be used on the lower connection only.

(2) Use of these accessories requires the user to cut out the precut partition.