PNI021

Pressure sensor with analogue input

PNI250-SBR14-QFRKG/US/ V

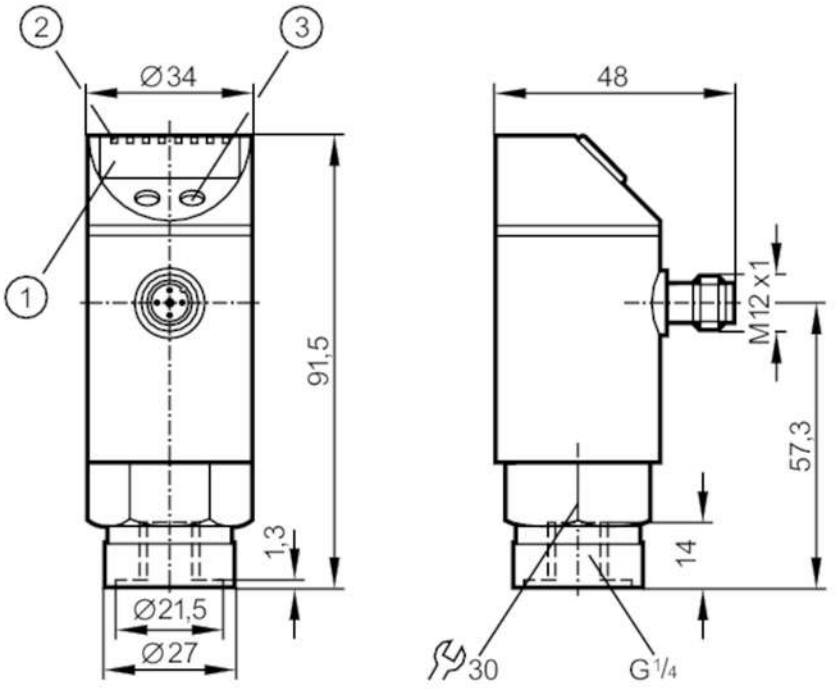

1 alphanumeric display 4-digit
2 LEDs Display unit / switching status
3 programming button

Product characteristics			
Number of inputs and outputs		Number of digital outputs: 2	
Measuring range	[bar]	0...250	
Process connection		threaded connection G 1/4 internal thread	
Application			
Special feature		Gold-plated contacts	
Application		for industrial applications	
Media		liquids and gases	
Conditionally suitable for		use in gases at pressures > 25 bar only on request	
Medium temperature	[°C]	-25...80	
Min. bursting pressure		850 bar	85 MPa
Pressure rating		400 bar	40 MPa
Type of pressure		relative pressure	
Electrical data			
Operating voltage	[V]	18...30 DC	
Current consumption	[mA]	< 90	
Min. insulation resistance	[MΩ]	100; (500 V DC)	
Protection class		III	
Reverse polarity protection		yes	
Power-on delay time	[s]	0.2	
Integrated watchdog		yes	

PNI021

Pressure sensor with analogue input

PNI250-SBR14-QFRKG/US/ V

Inputs / outputs		
Number of inputs and outputs		Number of digital outputs: 2
Inputs		
Analogue input (current)	[mA]	0...20
Input resistance	[Ω]	300
Analogue input (voltage)	[V]	0...10
Input resistance	[kΩ]	90
Outputs		
Total number of outputs		2
Output signal		switching signal
Electrical design		PNP/NPN
Number of digital outputs		2
Output function		normally open / normally closed; (parameterisable)
Max. voltage drop switching output DC	[V]	2
Permanent current rating of switching output DC	[mA]	250
Switching frequency DC	[Hz]	< 170
Short-circuit protection		yes
Type of short-circuit protection		pulsed
Overload protection		yes
Measuring/setting range		
Measuring range	[bar]	0...250
Set point SP	[bar]	-62...250
Note on setpoint SP		differential pressure
Reset point rP	[bar]	-63...249
Note on reset point rP		differential pressure
In steps of	[bar]	1
Accuracy / deviations		
Characteristics deviation [% of the final value]		< ± 0,6
Temperature drift per 10 K		< ± 0.3
Characteristics deviation analogue input		< ± 0.3
Temperature drift analogue input per 10 K		< ± 0.1
Temperature drift analogue input	[°C]	0...80
Response times		
Response time	[ms]	< 3
Delay time programmable dS, dr	[s]	0, 0,1...50
Damping process value dAP	[s]	0...4

PNI021

Pressure sensor with analogue input

PNI250-SBR14-QFRKG/US/ V

Software / programming			
Adjustment of the switch point		programming button	
Parameter setting options		hysteresis / window; normally open / normally closed; switching logic; current/voltage input; Damping; adaptation of displayed values; display can be rotated and switched off; Display unit	
Operating conditions			
Ambient temperature	[°C]	-25...80	
Storage temperature	[°C]	-40...100	
Protection		IP 67	
Tests / approvals			
EMC		EN 61000-4-2 ESD	4 kV CD / 8 kV AD
		EN 61000-4-3 HF radiated	10 V/m
		EN 61000-4-4 Burst	2 kV
		EN 61000-4-6 HF conducted	10 V
Shock resistance		DIN IEC 68-2-27	50 g (11 ms)
Vibration resistance		DIN IEC 68-2-6	20 g (10...2000 Hz)
MTTF	[years]	152	
Pressure Equipment Directive		Sound engineering practice; can be used for group 2 fluids; group 1 fluids on request	
Mechanical data			
Weight	[g]	293	
Housing		cylindrical	
Dimensions	[mm]	Ø 34 / L = 91.5	
Materials		stainless steel (303/1.4305); PBT; PC; PA; FKM	
Materials (wetted parts)		stainless steel (303/1.4305); ceramics; FKM	
Min. pressure cycles		100 million	
Process connection		threaded connection G 1/4 internal thread	
Restrictor element integrated		no (can be retrofitted)	
Displays / operating elements			
Display		Display unit	3 x LED, green
		display mode	3 x LED, green
		switching status	2 x LED, yellow
		function display	alphanumeric display, 4-digit
		measured values	alphanumeric display, 4-digit
Display unit		bar; psi; MPa	
Remarks			
Pack quantity		1 pcs.	

PNI021

Pressure sensor with analogue input

PNI250-SBR14-QFRKG/US/ V

Electrical connection

Connector: 1 x M12; coding: A; Contacts: gold-plated



Connection

