PARTS LIST			
ITEM	QTY	PART NUMBER	DESCRIPTION
1	1	M5601033	Base/Chassis Assembly
2	1	M5602012	Rear Panel
3	2	M5605004	Front/Rear Bezel
4	8	M5700202	Rack Card Guides
5	1	M5601068	Top Cover
6	1	M5600035	Handle Bar
7	4	M3 x 8 mm Pan Screw	Rear Panel Screws
8	8	M4 x 10 mm CSK	Bezel Fixing Screws
9	2	AS054231	Side Arm Kit

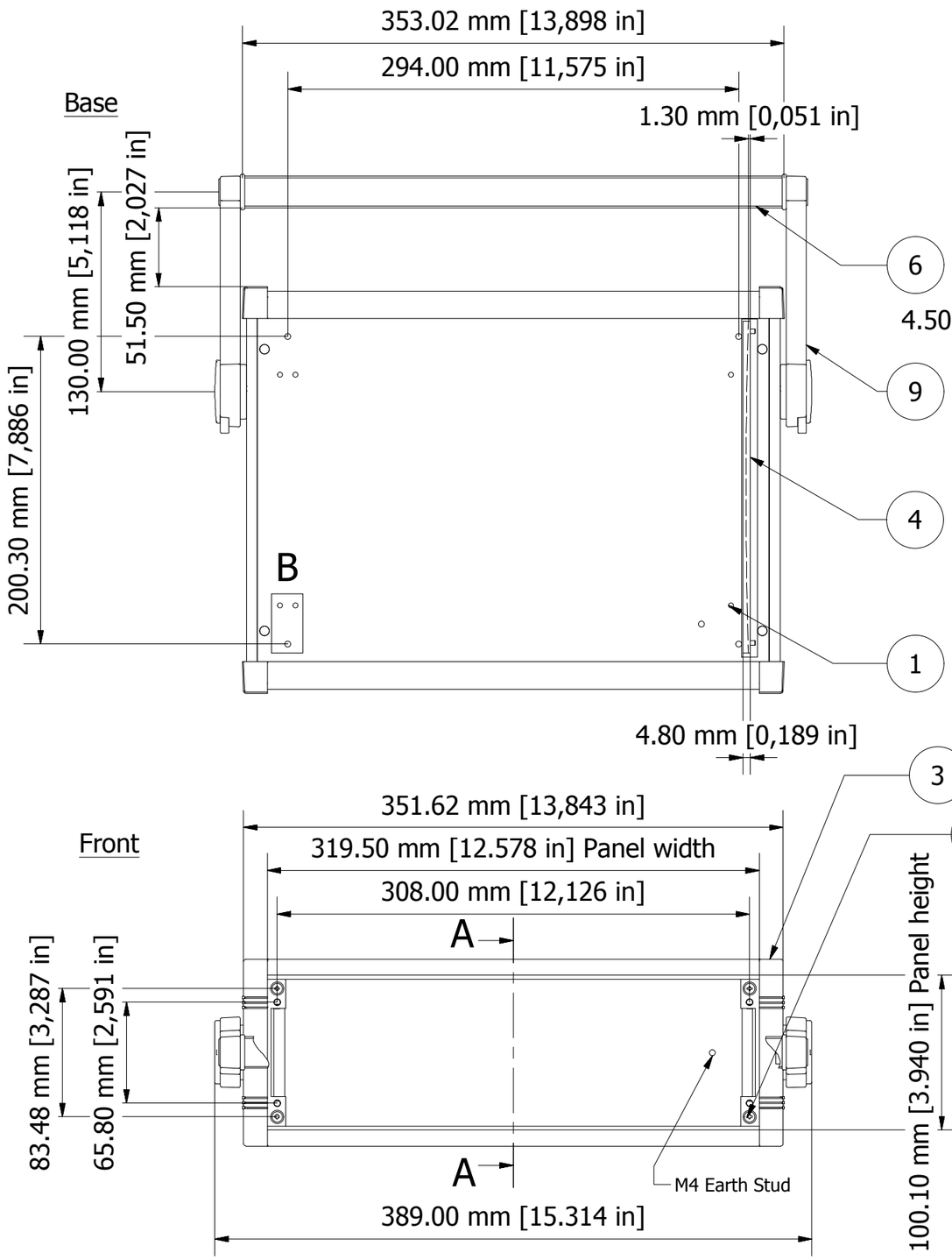

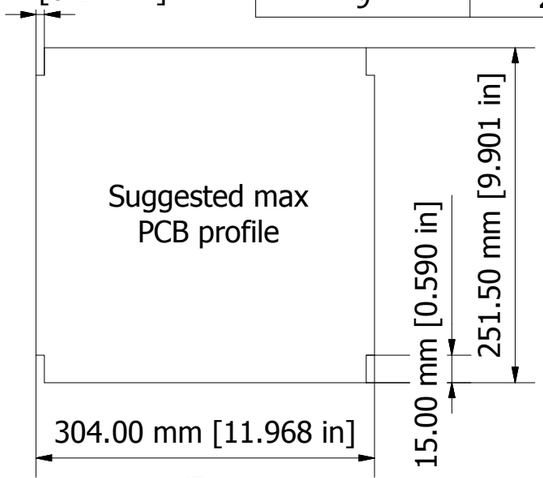

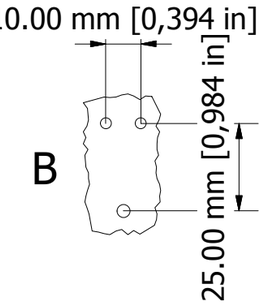

Foot hole detail:
2 holes Ø3.3 mm [0.13 in] & 1 hole Ø 3.8 mm [0.15 in]

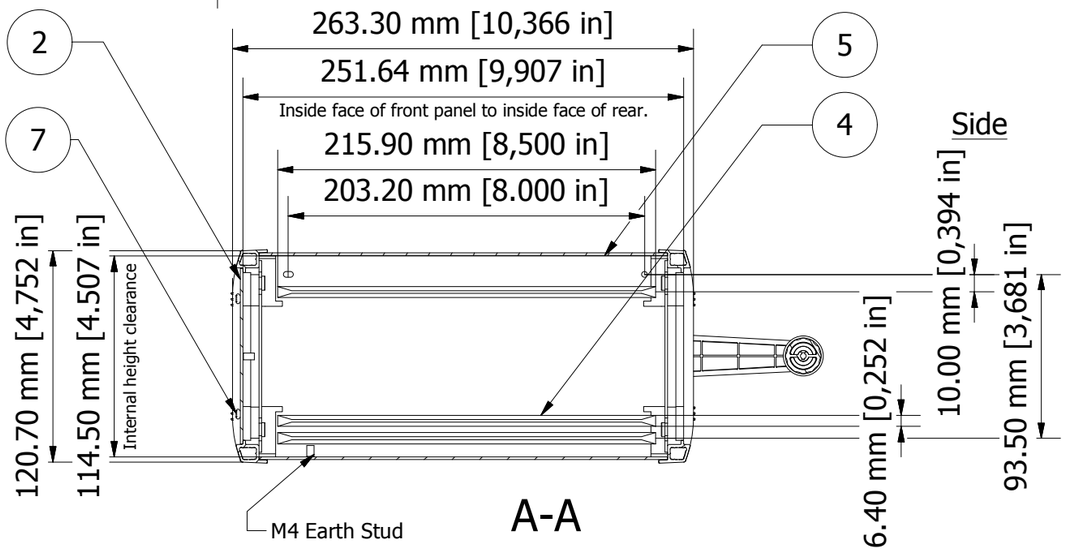

FIRST ANGLE PROJECTION

Notes:
1) Case is fabricated from 1.5 mm aluminium sheet with die cast & extrusion bezels.
2) Case is powder coat painted fine texture with RAL 7040 bezels and RAL 7035 panelwork.
3) Cover, base and rear panel all have M4 x 8 mm studs for earthing points.
4) Case supplied with 4 off plastic card guides - M5700203.

© OKW Enclosures Ltd (Date as shown). This drawing contains proprietary information of OKW Enclosures Ltd and is tendered subject to the following conditions. The information be retained in confidence, not be reproduced or copied, and not be used or incorporated in any product, unless permission is obtained in writing from OKW Enclosures Ltd.

Designed by	Description	Date	Scale
L Clark	Unimet-Plus 4H	25/04/2012	1:3.5

METCASE ENCLOSURES
15 Brunel Way, Segensworth East, Fareham,
Hampshire, UK. PO15 5TX
Tel: +44 (0)1489 583858 Email: metcase@okw.co.uk

METCASE www.metcase.com

Part Number	Issue	Sheet
M5635235	1	1 / 1