COMBINED FILTER/REGULATOR

Modulair 105 range

G 1/8 - G 1/4

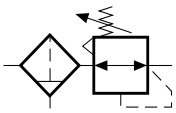

Series **342**

Type Modulair

FEATURES

- *Quick installation and connection to systems: filter and regulator functions in a "single unit"*
- *Light weight and robust design for installation on piping systems*



GENERAL

Fluid	Air or inert gas
Maximum inlet pressure (bar) P1 / at 23°C	12
/ at 50°C	10
Adjustable pressure ranges (bar) P2	0,5 to 8
Hysteresis (bar)	0,35
Ambient temperature range (°C)	+0 to +50
Max. flow (Qv at 6,3 bar)	See table below and chart
Regulator	Self-relieving

CONSTRUCTION

Filtering capacity	25 µm (5 µm on request)
Semi-automatic drain	Operating pressure: min. 1,2 bar
Pressure control knob	Locking "pull-turn-push"
Regulating device	With rolling diaphragm (very low hysteresis)

SPECIFICATIONS

pipe size	bowl capacity	adjustable pressure range	flow			gauge diameter	catalogue number	
			inlet pressure P1	Setpoint P2 = 6,3 bar ΔP = 1 bar			semi-automatic drain	
(G)	(cm^3)	(bar)	(bar)	l/min (ANR)	dm^3/s (ANR)		with 0-10 bar gauge	without gauge
25 µm - Polycarbonate bowl WITH protector [1]								
1/8	28	0,5 to 8	8	550	9	40	**34225203**	**34225201**
1/4	28	0,5 to 8	8	650	11	40	**34225204**	**34225202**
25 µm - Polycarbonate bowl WITHOUT protector								
1/8	28	0,5 to 8	8	550	9	40	**34225123**	**34225121**
1/4	28	0,5 to 8	8	650	11	40	**34225124**	**34225122**

[1] Adjustment range 0,2 to 3 bar and other values on request.

INSTALLATION

- Systems must be installed with the bowls in vertical position (at the bottom)
- Air flow direction indicated by arrow and "IN" - "OUT" marking on body
- Use an alkaline solution (soapy water) and not a solvent for cleaning the polycarbonate bowls and sight glasses

ACCESSORIES (See Accessories pages)

00754GB-2016/R01
Availability, design and specifications are subject to change without notice. All rights reserved.

OPTIONS

- Manual drain, code: **662563**
- Equipment for use in potentially explosive atmospheres caused by dusts or gases (ATEX Directive 2014/34/EU)

zones	classification	gas group	ATEX option code
2-22	II 3GD c T85°C (T6)	IIA-IIB-IIC	**612077**
1-21	II 2GD c IIB T85°C (T6)	IIB	**612076**

PRESSURE LOSS VERSUS AIR FLOW CURVE

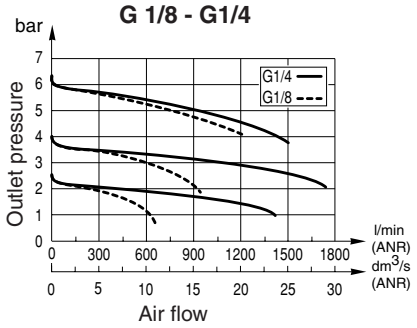

DIMENSIONS (mm), WEIGHT (kg)

Weight: 0,190

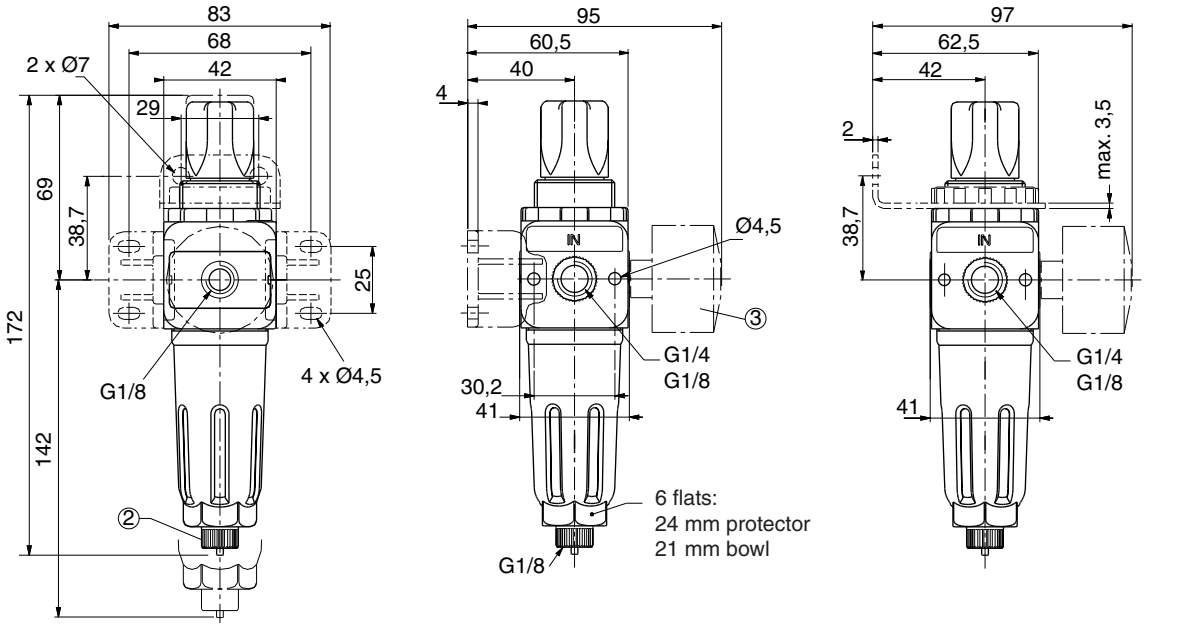

(1) Mounting with top bracket (accessory) and mounting ring

(2) Semi-automatic drain, connectable to G1/8 port

(3) 40 mm dia. pressure gauge

00754GB-2016/R01
Availability, design and specifications are subject to change without notice. All rights reserved.