Brand of NTN corporation

Technical data

ESPLE205

Bearing units



Grey cast housing, radial insert ball bearing with eccentric locking collar, single lip seal

KIT CONTENT

ES205G2, PLE205

VISUAL (S)

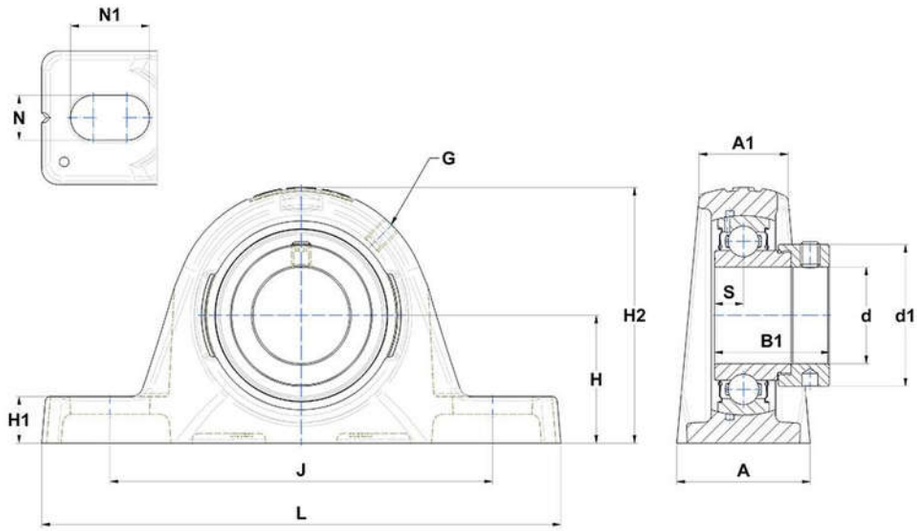

PRODUCT DEFINITION

Brand	SNR
A - Housing width	36,5 mm
A1 - Housing top width	24,5 mm
B - Width of Inner Ring	21,4 mm
d - Shaft diameter	25 mm
d1 - Outer dia of eccent. Lock. collar / nut of adapter sleeve	37,4 mm

PRODUCT DEFINITION	
G - Grease fitting	M6x1
H - Distance mounting base to centerline spheric. seating diam.	33,3 mm
H1 - Housing foot height	12,8 mm
H2 - Housing height	67,8 mm
J - Mounting holes distance	104,2 mm
L - Housing length	139 mm
N - Mounting hole dimension	11 mm
N1 - Mounting hole length	17 mm
S - Distance front side/bearing centre	7,5 mm

PRODUCT PERFORMANCE	
C - Dynamic load rating	14000000 mN
C0 - Static load rating	7880000 mN
Operating temperature min.	253,15 °K
Operating temperature max.	373,15 °K

OTHER FEATURES	
Mass	0,79 kg
Recommended tightening torque for set screw	5.5 N-m