E11274

Connection cable

VDOAR040PLS0002HSTGH040VAS

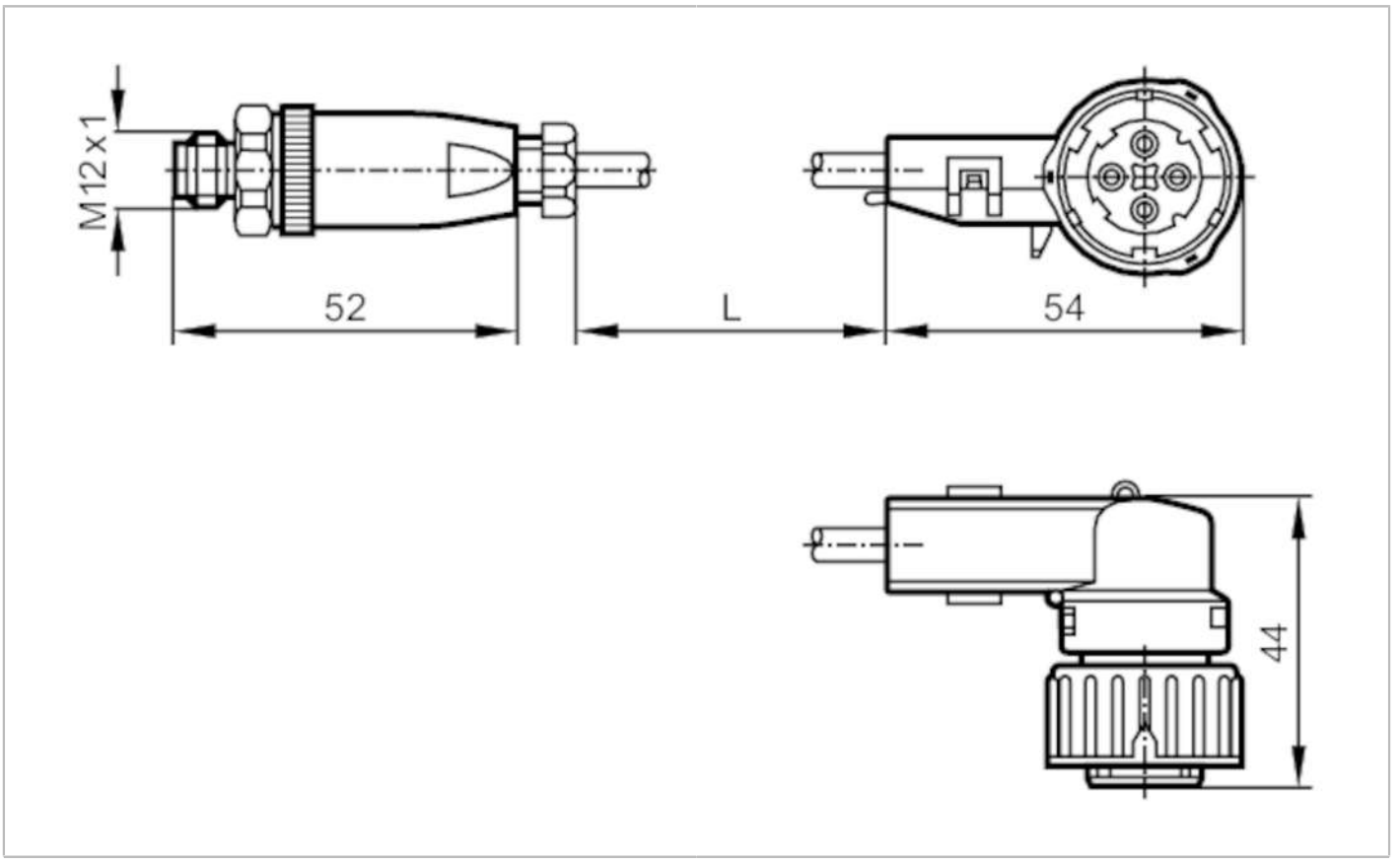

CE

Application		
Special feature		Halogen-free
Design		for communication with the programming unit PP2000
Electrical data		
Operating voltage	[V]	9.6...30 DC
Operating conditions		
Ambient temperature	[°C]	-40...85
Protection		IP 67; (Connecting cable with socket: IP 67 / IP 69K)
Mechanical data		
Weight	[g]	131
Moulded-body material		PA / Hytrel G-4774
Remarks		
Pack quantity		1 pcs.

E11274

Connection cable

VDOAR040PLS0002HSTGH040VAS

Electrical connection

Cable: 2 m, PUR, Halogen-free, black, Ø 6 mm; 4 x 0.5 mm²

Electrical connection - plug

Connector: 1 x M12, straight; coding: A; Moulded body: PA



Connection

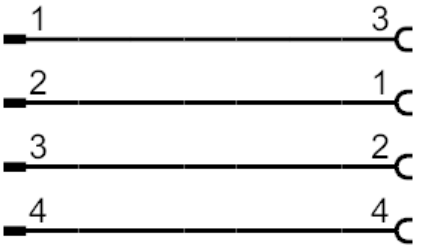

Electrical connection - socket

Connector: 1 x bayonet, angled; Moulded body: Hytrel G-4774

