

Image may differ from product. See technical specification for details.

RIS 203

Rubber seating ring for insert bearing

Rubber seating rings in the RIS 2 series are primarily intended to cushion insert bearings in pressed steel pillow (plummer) block housings. Located between the bearing outer ring and housing bore, they dampen vibration and noise and enable the bearings to be displaced slightly in their housings and to accommodate minor shaft expansion or misalignment.

- Cushion the insert bearing
- Dampen vibrations and noise
- Accommodate slight misalignment

Overview

Dimensions

Outside diameter	47.3 mm
Width	18 mm
Bore diameter	35.5 mm

Properties

Accessory type	Rubber seating ring
Material	Rubber

Logistics

Product net weight	0.012 kg
eClass code	23-05-08-02
UNSPSC code	31171536

Technical specification

Associated bearing

Bearing outside diameter	D	40 mm

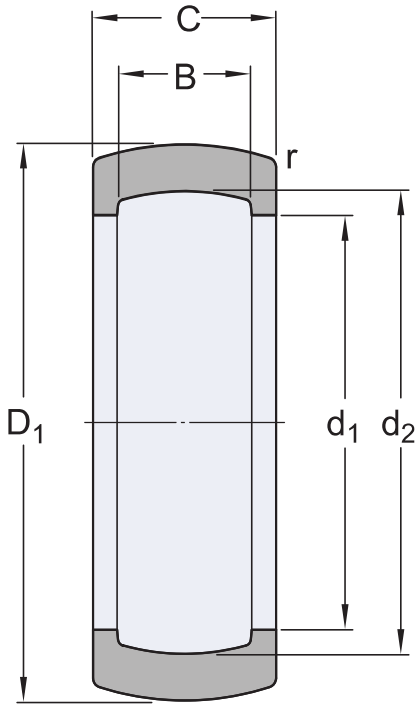

Dimensions

B	12 mm	Inner width rubber seating ring
C	18 mm	Outer width rubber seating ring
d_1	35.5 mm	Inner diameter rubber seating ring
d_2	39.8 mm	Inner diameter rubber seating ring
D_1	47.3 mm	Outside diameter rubber seating ring
r	min. 1 mm	Chamfer radius rubber seating ring

Tolerances and clearances

GENERAL BEARING SPECIFICATIONS

- Tolerances: table 1, table 2
- Radial internal clearance: Standard inner ring, Other bearings

BEARING INTERFACES

- Shaft tolerances

More Information

Product details

- Designs and variants
- Lubrication
- General bearing specifications
- Loads
- Temperature limits
- Permissible speed
- Design considerations
- Mounting and dismounting
- Designation system

Engineering information

- Principles of rolling bearing selection
- General bearing knowledge
- Bearing selection process
- Bearing failure and how to prevent it

Tools

- SKF Product select
- Bearing Frequency Calculator
- SimPro Quick
- Heater selection tool

Terms of use

By accessing and using this website / app owned and published by AB SKF (publ.) (556007-3495 · Gothenburg) (“SKF”), you agree to the following terms and conditions:

Warranty Disclaimer and Limitation of Liability
Although every care has been taken to assure the accuracy of the information on this website / app, SKF provides this information "AS IS" and DISCLAIMS ALL WARRANTIES, EXPRESS OR IMPLIED, INCLUDING, BUT NOT LIMITED TO, IMPLIED WARRANTIES OF MERCHANTABILITY AND FITNESS FOR A PARTICULAR PURPOSE. You acknowledge that your use of this website / app is at your sole risk, that you assume full responsibility for all costs associated with use of this website / app, and that SKF shall not be liable for any direct, incidental, consequential, or indirect damages of any kind arising out of your access to, or use of the information or software made available on this website / app.

Any warranties and representations in this website / app for SKF products or services that you purchase or use will be subject to the agreed upon terms and conditions in the contract for such product or service.

Further, for non-SKF websites / apps that are referenced in our website / app or where a hyperlink appears, SKF makes no warranties concerning the accuracy or reliability of the information in these websites / apps and assumes no responsibility for material created or published by third parties contained therein. In addition, SKF does not warrant that this website / app or these other linked websites / apps are free from viruses or other harmful elements.

Third Party Services
When viewing YouTube content via the SKF website(s) (i.e. using YouTube API Services), you agree to be bound by the YouTube Terms of Service.

Copyright
Copyright in this website / app copyright of the information and software made available on this website / app rest with SKF or its licensors. All rights are reserved. All licensed material will reference the licensor that has granted SKF the right to use the material. The information and software made available on this website / app may not be reproduced, duplicated, copied, transferred, distributed, stored, modified, downloaded or otherwise exploited for any commercial use without the prior written approval of SKF. However, it may be reproduced, stored and downloaded for use by individuals without prior written approval of SKF. Under no circumstances may this information or software be supplied to third parties.

This website /app includes certain images used under license from Shutterstock, Inc.

Trademarks and Patents
All trademarks, brand names, and corporate logos displayed on the website / app are the property of SKF or its licensors, and may not be used in any way without prior written approval by SKF. All licensed trademarks published on this website / app reference the licensor that has granted SKF the right to use the trademark. Access to this website / app does not grant to the user any license under any patents owned by or licensed to SKF.

Changes
SKF reserves the right to make changes or additions to this website / app at any time.