Product Data Sheet **8315100198**

VKCK119DKLSS

DiaForce 120 Standard

ebmpapst

engineering a better life



DiaForce 120 Standard

INDEX

1 General 3

2 Mechanics 3

2.1 General 3
2.2 Connections 3

3 Operating Data 5

3.1 Electrical Interface - Input 5
3.2 Electrical Operating Data 7
3.3 Electrical Interface - Output 8
3.4 Electrical Features 9
3.5 Data According ErP Directive 9
3.6 Aerodynamics 10
3.7 Sound Data 11

4 Environment 11

4.1 General 11
4.2 Climatic Requirements 11
4.3 Mechanical Requirements 12
4.4 EMC 12

5 Safety 14

5.1 Electrical Safety 14
5.2 Approval Tests 14

6 Reliability 14

6.1 General 14

1 General

Fan type	Axial	
Rotating direction looking at rotor	Clockwise	
Airflow direction	Air outlet over struts	
Bearing system	Ball bearing	
Mounting position - shaft	Any	

2 Mechanics

2.1 General

Width	119 mm	
Height	119 mm	
Depth	86 mm	
Diameter	110 mm	
Mass	0,98 kg	
Housing material	Mixed	
Impeller material	Plastic	
Screw size	ISO 4762 - M4 degreased, without an additional brace and without washer	

2.2 Connections

Electrical connection	Wires	
Lead wire length Tolerance	L = 400 mm +- 10 mm	



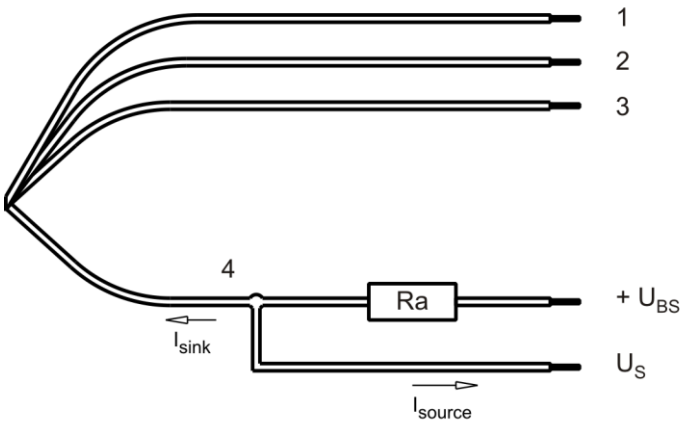

Wire	Color	Operation	Wire size	Insulation diameter
1	red	+ UB	AWG 16	2,05 mm
2	blue	- GND	AWG 16	2,05 mm
3	violet	PWM	AWG 22	1,7 mm
4	white	Tacho	AWG 22	1,7 mm

The auxilliaries shown on the schematic diagram (which are required for the intended use) are not part of our delivery.

3 Operating Data

3.1 Electrical Interface - Input

Control input	Analog

Features

PWM - Frequency		1 kHz - 10 kHz typical: 2 kHz
Input voltage range		0 V - 10 V

Characteristics

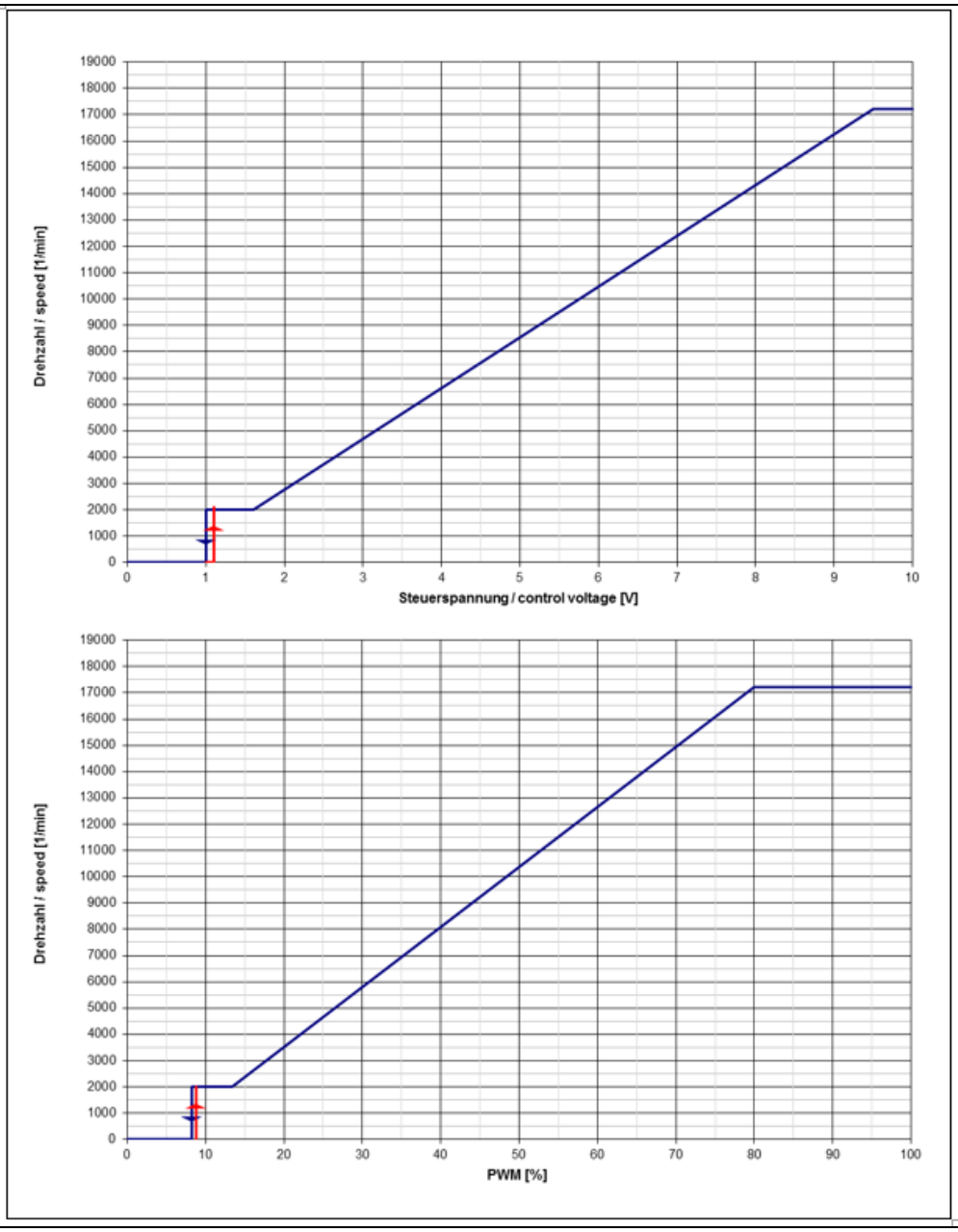

Schematics

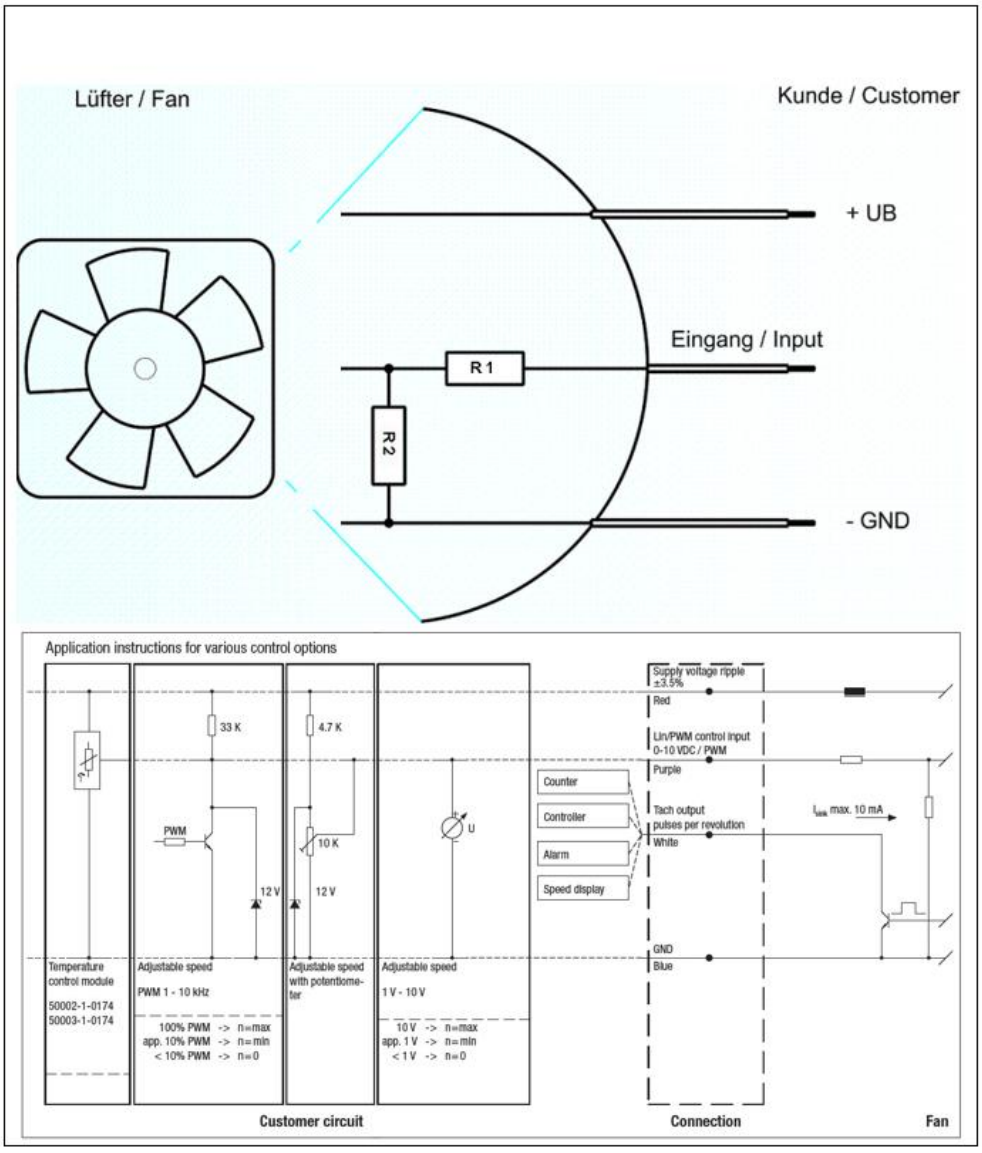

Input voltage divider:
R1 = 65 kOhm
R2 = 22kOhm

Speed control:
By pulse-width modulation (PWM) 0 ... 100%
with switching transistor in emitter circuit and collector resistor to 12 V
Frequency = 2 kHz (1 - 10 kHz)

Information to the curve PWM:

0% - <8% PWM:	0 1/min
8% PWM:	2.000 1/min (Fan on, coming from 0% PWM)
8% - 13% PWM:	2.000 1/min (corresponding to min. speed)
13% - 80% PWM:	linear increasing curve
80% - 100% PWM:	17.200 1/min (corresponding to max. speed)

or:

Speed control:
By analog voltage 0 - 10 V

Information to the curve analog:
0 V - < 1,0 V: 0 1/min
1,0 V: 2.000 1/min (Fan on, coming from von 0 V)
1,0 V - 1,6 V: 1.000 1/min (corresponding to min. speed)
1,6 V - 9,5 V: linear increasing curve
9,5 V - 10 V: 17.200 1/min (corresponding to max. speed)
Note:
It must be ensured that the power supply is applied before the control signal (U Contr) is turned on.

The fan has no sensor break detection. This means - when the input is not connected, the speed is set to zero.

3.2 Electrical Operating Data

Measurement conditions: Normal air density = 1,2 kg/m3; Temperature 23°C +/- 3°C; Motor axis horizontal; warm-up time before measuring 5 minutes. In the intake and outlet area should not be any solid obstruction within 0,5 m.

$\Delta p = 0$: corresp. to free air flow (see chapter aerodynamics)
I: corresp. to arithm. mean current value

Name	Condition		
U Contr. 0001	U Contr.: 10 V		

Features	Condition	Symbol	Values		
Voltage range		U	36 V		60 V
Nominal voltage		U_N		48 V	
Power consumption Tolerance	$\Delta p = 0$ U Contr. 0010	P	216 W +- 15 %	450 W +- 15 %	450 W +- 15 %
Current consumption Tolerance	$\Delta p = 0$ U Contr. 0010	I	6.000 mA +- 15 %	9.370 mA +- 15 %	7.500 mA +- 15 %
Speed Tolerance	$\Delta p = 0$ U Contr. 0010	n	13.400 1/min +- 3 %	17.200 1/min +- 3 %	17.200 1/min +- 3 %

3.3 Electrical Interface - Output

Tacho type	/2 (open collector)

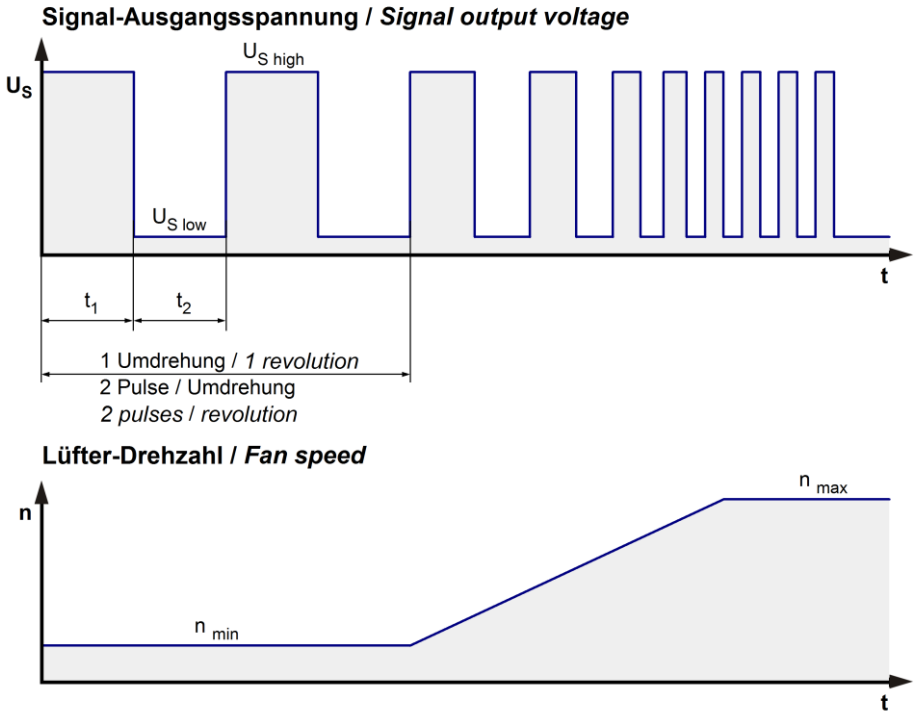

$$Ra = \frac{U_{BS} - U_{S\,low}}{I_{sink}}$$

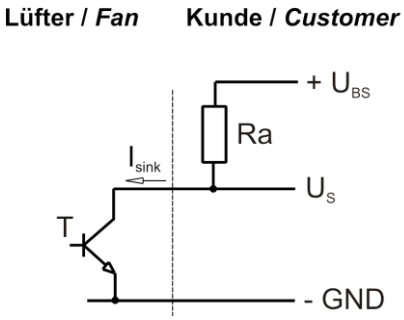

Features		Note	Values
Tacho operating voltage	U_{BS}		<= 60 V
Tacho signal Low	$U_{S\,low}$	I sink: 20 mA	<= 0,4 V
Tacho signal High	$U_{S\,high}$	I source: 0 mA	<=60 V
External resistor		External resistor Ra from UBS to US required. All voltages measured to GND.	
Tacho frequency		(2 x n) / 60	573 Hz @ 17.200 1/min

n = revolutions per minute (1/min)

3.4 Electrical Features

Electronic function	Speed-Controlled	
Reversed polarity protection Max. residual current at U_N	N-CH FET I_F < 5 mA	
Locked rotor protection	Auto restart	
Locked rotor current at U_N	I_{block} approx. 1.800 mA	
Clock signal at locked rotor Extended Downtime	t_3 / t_4 typical: 2,5 s / 10 s t_5: 40 s after 2 start-up tests	
Voltage control *)	Fan turns on at U_B > 33 V or < 65 V Fan turns off at U_B < 31 V or > 68 V	

*) This fan has an undervoltage and overvoltage control circuit integrated which turns the motor off if the voltage is out of range.

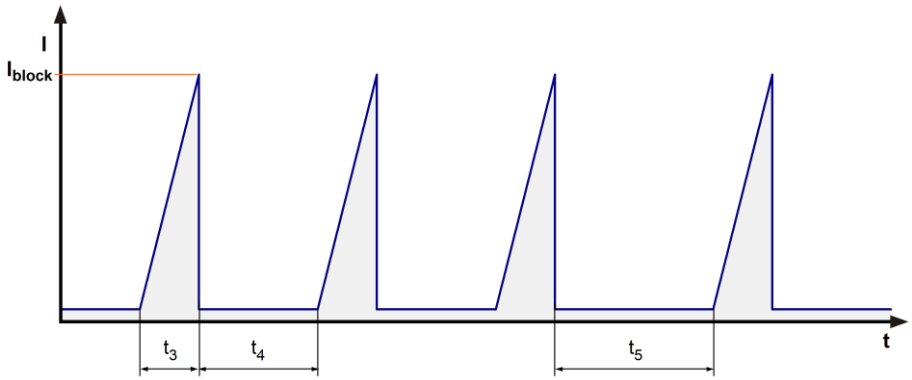

Inrush current limiter:
This fan is equipped with an inrush current limiter to reduce the charging current of the internal capacitors. By this circuit the fan gets a start-up delay of 0,5 s after connecting the supply voltage. Only a short peak current can be measured at the inrush by charging the small internal filter capacitors with approximately 4.4 uF.

3.5 Data According ErP Directive

Installation / Efficency category	A / static
Speed control	integrated
Specific ratio	1,02136
Target overall efficiency 2015	31,8 %
Overall efficiency	56,0 %
Efficiency grade	40
Power input	500 W
Speed	17.200 1/min

All values measured in optimum energy efficiency point.

Productiondatecode is printed on the fan label.

3.6 Aerodynamics

Measurement conditions:	Measured with a double chamber intake rig acc. to DIN EN ISO 5801. Normal air density = 1,2 kg/m3; Temperature 23°C +/- 3°C; In the intake and outlet area should not be any solid obstruction within 0,5 m. Motor shaft horizontal. The information is only valid under the specified test conditions and may be changed by the installation conditions. If there are deviations from the standard test conditions, the characteristic values must be checked under the installed conditions. Power consumption of the fan motor when operating at normal voltage is shown. Depending on the operating conditions of the application, the power input may be higher.

a.) Operation condition:

17.280 1/min at free air flow	U Contr. 10 V		

Max. free-air flow (Δp = 0 / $\dot{V}$ = max.)	680 m3/h	
Max. static pressure (Δp = max. / $\dot{V}$ =0)	3.120 Pa	

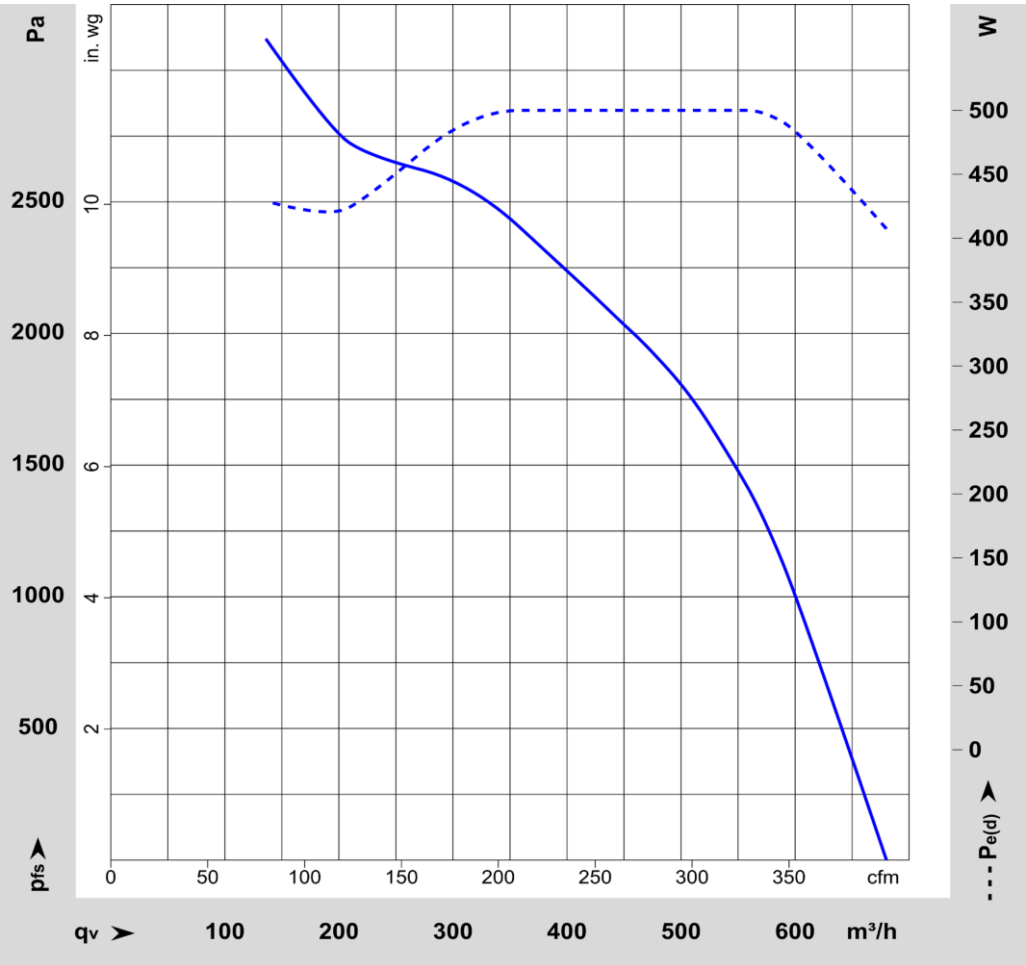

3.7 Sound Data

Measurement conditions:	Sound pressure level: 1 meter distance between microphone and the air intake. Sound power level: Acc. to DIN 45635 part 38 (ISO 10302) Measured in a semianechoic chamber with a background noise level of Lp(A) < 5 dB(A) For further measurement conditions see chapter aerodynamics.

a.) Operation condition:

17.280 1/min at free air flow	U Contr. 10 V		

Optimal operating point	470 m3/h @ 1965 Pa	
Sound power level at the optimal operating point	9,1 bel(A)	
Sound pressure level at free air flow, measured in rubber bands	83,5 dB(A)	

4 Environment

4.1 General

Min. permitted ambient temperature TU min.	-25 °C	
Max. permitted ambient temperature TU max.	70 °C	
Min. permitted storage temperature TL min.	-40 °C	
Max. permitted storage temperature TL max.	80 °C	

4.2 Climatic Requirements

IP-protection type (certified)	IP 20 **)	
Humidity requirements	humid heat, cyclic; according to DIN EN 60068-2-30, 6 cycle	
Salt fog requirements	None	

Permitted application area:
The product is for the use in sheltered rooms with limited controlled temperature. Occasionally condensed water is allowed. Direct exposure to water must be avoided. Saline ambient conditions must be avoided.

Pollution degree 2 (according DIN EN 60664-1)
It occurs only non-conductive pollution. Occassionally, temporary conductivity caused by condensation occurs.

**) The specification of the IP protection refers to the conditions mentioned in certification of the fan. The above mentioned short description of the protection scope is not final. For detailed information of the respective protection scope and definitions, see certification as well as DIN EN 60529 (protection by housings) and ISO 20653 (for vehicles) with the letter K.

Short description of the IP-protection type:
Solid particle Protection: Protected against solid particles with a diameter of 12.5 mm and larger.
Protection against deliberate contact: Protected against contact to hazardous parts with a finger.
Protection against water: No protection.

4.3 Mechanical Requirements

severity level	stationary use		
1	storage / transportation	Random vibration not in use IEC 60068-2-64 Frequency range / ASD G_{RMS} Axes of vibration Test duration	 Random vibration 5 - 20 Hz : 1,0 m^2 / s^3 20 - 500 Hz : - 3 dB / Oct 0,91 G 3 3 x 5 h
	storage / transportation	Bump not in use IEC 60068-2-29 Shock spectrum Acceleration Duration Number of bumps (+X, -X, -Y, +Y, -Z, +Z) Total bumps	 Bump half sine 18 G 6 ms 100 in each direction 600
	stationary use	Random vibration in use IEC 60068-2-64 Frequency range / ASD G_{RMS} Axes of vibration Test duration	 Random vibration 5 - 20 Hz : 2,0 m^2 / s^3 20- 150 Hz : - 3 dB / Oct 0,83 G 3 3 x 5 h
	stationary use	Bump in use IEC 60068-2-29 Shock spectrum Acceleration Duration Number of bumps (+X, -X, -Y, +Y, -Z, +Z) Total bumps	 Bump half sine 5 G 11 ms 100 in each direction 600

4.4 EMC

Kind	**Electrostatic Discharge Immunity Test**
According	DIN EN 61000-4-2:2001-12
Ceck accuracy / Limit	Contact discharge +/- 6 kV; Air discharge +/- 8 kV
Result	A: The monitored function operates as designed during and after exposure to a disturbance.

Kind	**Electromagnetic Field Immunity Test**
According	DIN EN 61000-4-3:2006-12
Ceck accuracy / Limit	10 V/m; 80 - 1000 MHz; AM; m = 0,8; f = 1 kHz; 1%; t = 3 s
Result	A: The monitored function operates as designed during and after exposure to a disturbance.

Kind	**Electrical Fast Transient / Burst Immunity Test**
According	DIN EN 61000-4-4:2005-07
Ceck accuracy / Limit	+/- 2 kV on Power Lines; Coupling: POS, NEG, {PE}, ALL, 5 kHz and 100 kHz; 1 min
Result	A: The monitored function operates as designed during and after exposure to a disturbance.

Kind	**Immunity to Conducted Disturbances, Induced by RF-Fields**
According	DIN EN 61000-4-6:2001-12
Ceck accuracy / Limit	10 Vrms; 150 kHz - 80 MHz; AM; m = 0,8; f = 1 kHz; 1%; t = 3 s
Result	A: The monitored function operates as designed during and after exposure to a disturbance.

5 Safety

5.1 Electrical Safety

Dielectric strength DIN EN 62368 and DIN EN 60335 A.) Type test Measuring conditions: After 48h of storage at 95% R.H. and 25°C. No arcing or breakdown is allowed! All connections together to ground. B.) Routine test Measuring conditions: At indoor climate. No arcing or breakdown is allowed! All connections together to ground.	Not applicable 850 VDC / 1 Sec.	
Isolation resistance Measuring conditions: After 48h of storage at 95% R.H. and 25°C measured with U=500 VDC for 1 min.	RI > 10 MOhm	
Clearance / creepage distance	1,0 mm / 1,5 mm	
Protection class	III	

5.2 Approval Tests

CE	EC Declaration of Conformity	Yes
EAC	Eurasian Conformity	Yes
UL	Underwriters Laboratories	Yes / UL507, Electric Fans E38324
VDE	Association for Electrical, Electronic and Information Technologies	Yes / Approval acc. to EN 62368 - Audio/video, information and communication technology equipment
CSA	Canadian Standards Association	Yes / CSA audited by UL according to C22.2 No. 113 Fans and Ventilators
CCC	China Compulsory Certification	Yes / GB 12350 Safety Requirements for small Power Motors

6 Reliability

6.1 General

Life expectancy L10 acc. to IPC 9591 at TU = 40 °C	70.000 h	

The reproduction, distribution and utilization of this document as well as the communication of its contents to others without express authorization is prohibited. Offenders will be held liable for the payment of damages. All rights reserved in the event of the grant of a patent, utility model or design. Refer to protection notice ISO 16016!

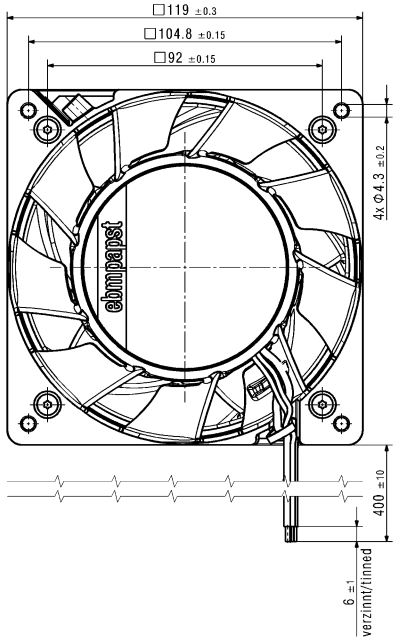

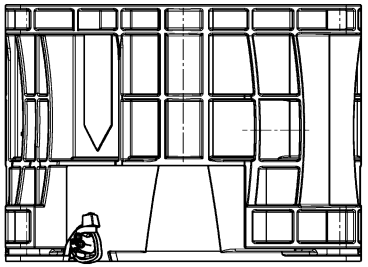

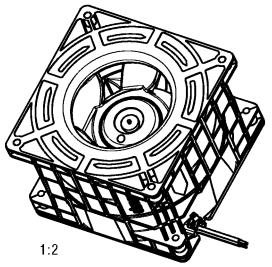

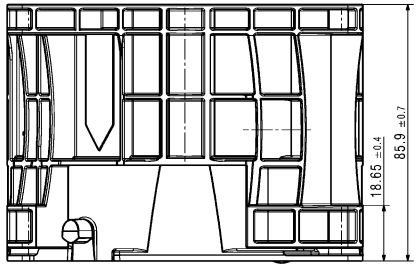

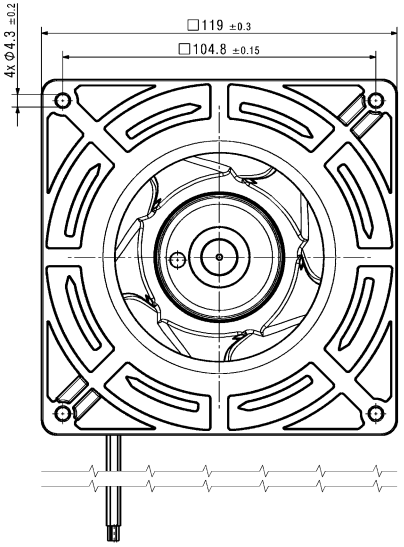

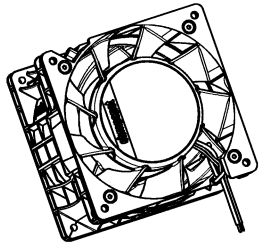

Title				Material	Digital signature
Part needed for	Index –	Doc type	Sheet		Change-No.
	Designed name		Designed date	Volume [mm³]	CAD environment
Substitute for	Released name		Released date	Mass [g]	CAD release
ebmpapst ebm-papst St. Georgen GmbH & Co. KG	Tolerances			General tolerances	3D-reference model 8315100198 CPR 000 -
	Scale	Format	Document status		

1 2 3 4 5 6 7 8 9 10 11 12

A B C D E F G H