PR electronics



2261

mV transmitter

No. 2261V102-UK
From ser. no. 970106001

DK ▶ PR electronics A/S tilbyder et bredt program af analoge og digitale signalbehandlingsmoduler til industriel automation. Programmet består af Isolatorer, Displays, Ex-barrierer, Temperaturtransmittere, Universaltransmittere mfl. Vi har modulerne, du kan stole på i selv barske miljøer med elektrisk støj, vibrationer og temperaturudsving, og alle produkter opfylder de strengeste internationale standarder. Vores motto »Signals the Best« er indbegrebet af denne filosofi – og din garanti for kvalitet.

UK ▶ PR electronics A/S offers a wide range of analog and digital signal conditioning devices for industrial automation. The product range includes Isolators, Displays, Ex Interfaces, Temperature Transmitters, and Multifunctional Devices. You can trust our products in the most extreme environments with electrical noise, vibrations and temperature fluctuations, and all products comply with the most exacting international standards. »Signals the Best« is the epitome of our philosophy – and your guarantee for quality.

FR ▶ PR electronics A/S offre une large gamme de produits pour le traitement des signaux analogiques et numériques dans tous les domaines industriels. La gamme de produits s'étend des transmetteurs de température aux afficheurs, des isolateurs aux interfaces SI, jusqu'aux modules universels. Vous pouvez compter sur nos produits même dans les conditions d'utilisation sévères, p.ex. bruit électrique, vibrations et fluctuations de température. Tous nos produits sont conformes aux normes internationales les plus strictes. Notre devise »SIGNALS the BEST« c'est notre ligne de conduite - et pour vous l'assurance de la meilleure qualité.

DE ▶ PR electronics A/S verfügt über ein breites Produktprogramm an analogen und digitalen Signalverarbeitungsgeräte für die industrielle Automatisierung. Dieses Programm umfasst Displays, Temperaturtransmitter, Ex- und galvanische Signaltrenner, und Universalgeräte. Sie können unsere Geräte auch unter extremen Einsatzbedingungen wie elektrisches Rauschen, Erschütterungen und Temperaturschwingungen vertrauen, und alle Produkte von PR electronics werden in Übereinstimmung mit den strengsten internationalen Normen produziert. »Signals the Best« ist Ihre Garantie für Qualität!

mV TRANSMITTER

TYPE 2261

CONTENTS

Applications 2
Technical characteristics 3
Inputs 3
Taring 3
Standard current / voltage output 3
Front error LED 4
Transducer supply 4
Sense 4
Electrical specifications 4
Order 6
Hardware programming 6
Block diagram 7
Routing diagram 8
Programming / operating the function keys 10
Description of functions (selection of application) 13

mV TRANSMITTER

- *Load cell amplifier*
- *mV to current / voltage conversion*
- *Front-programmable / LED display*
- *Relative calibration of input span*
- *NPN / PNP input for external taring*
- *Supply for standard transducers*

SUPPLY:

Supply voltage:	**24 VDC**
Transducer supply:	**5...13 VDC**

INPUT RANGE:

Measurement range:	**-40...100 mV**
Taring input:	**PNP / NPN / front key**

OUTPUT RANGE:

Current output:	**0...20 mA**
Voltage output:	**0...10 V**

Applications

Tank filling and draining
Weighing with a taring function
Measurement of cable tensile force
Level control
Signal conversion / amplification

The 2261 converts bipolar mV signals from transducers supplied directly by the module to standard current / voltage signals. The 2261 is suitable for load cell applications. By way of the relative calibration function the scale can be tared, i.e. 0 and 100% calibrated without the need of the equivalent load. By way of the taring function the measured range is set to either 0% when filling or 100% when draining.

Technical characteristics

In general:
The 2261 is microprocessor-controlled and basic-calibrated meaning that input and output can be programmed acc. to the requested signal range without any readjustment. This guarantees high accuracy and flexibility.
The user interface consists of a 3-digit display and 3 front function keys which are used for taring or change of input / output signal range.

Inputs

Analog input

The analog input can be programmed for voltage in the range -40...100 mVDC with a min. span of 10 mV and max. offset of 70% of max. mV value.
A percentage overrange of the selected measurement range can be defined, thereby making the unit react to an mV input outside the selected 0 and 100% range. The display will show the input percentage.
The output must be scaled in such a way that the selected overrange is within the allowed output signal range.

Digital input:

The digital signal can be selected as either NPN (short circuit to gnd.), or PNP (+24 VDC).

Taring

Taring can either be by way of the digital input or from the front.
At 0% taring, the analog input will show 0% after taring. At 100% taring, the analog input will show 100% after taring, corresponding to tara + net weight = gross weight.
The analog input span is not changed but is kept relative to the new offset value.
The taring function can be disabled at the front.

Standard current / voltage output

The analog output can be programmed to current in the range 0...20 mA or voltage in the range 0...10 VDC with a min. span of 5 mA or 250 mVDC with max. offset of 50% of the selected max. value.
By short-circuiting pins 2 and 3, the voltage signal is available between pins 2 and 1.
For voltage signals in the range 0...1 VDC, a 50 Ω shunt (DP 2-1) is applied; in the range 0...10 VDC, a 500 Ω shunt (DP 2-2) is applied.
When both voltage and current signals are used simultaneously, the mA loop must go to ground through the internal shunt.

Front error LED
At an incorrect output, the red LED will flash, e.g. at overrange saturation.

Transducer supply
Front-programmable to 5...13 VDC. It is up to the customer to ensure a max. load of 230 mA (e.g. 6 parallel 350 Ω load cells).

Sense
When the transducer supply is applied, the sense input can be used for compensation for cable resistance to the transducer.

Electrical specifications

Specifications range:
-20°C to +60°C

Common specifications:

Supply voltage	19.2...28.8 VDC
Internal consumption	2.2 W
Max. consumption	7.2 W
Signal / noise ratio	Min. 60 dB
Signal dynamics, input	17 bit
Signal dynamics, output	16 bit
Updating time	20 ms
Response time, programmable	0.06...999 s
Calibration temperature	20...28°C
Temperature coefficient	< ±0.01% of span / °C
Linearity error	≤ ±0.1% of span
Effect of supply voltage change	< ±0.002% of span/ %V
Auxiliary voltage:	
Transducer supply	5...13 VDC
Load (max.)	230 mA
EMC immunity influence	< ±0.5% of span
Relative air humidity	< 95% RH (non-cond.)
Dimensions (HxWxD)	80.5 x 35.5 x 84.5 mm
Protection degree	IP50
Weight	130 g

Electrical specifications - Input:

mV input:

Measurement range	-40...100 mV
Min. measurement range (span)	10 mV
Max. offset	70% of selected max. value
Input in relation to supply gnd	> -5 V and < +10 V
Max. cable resistance per wire	15 Ω
Suppression of transducer cable resistance	> 300
Input resistance	> 10 MΩ
Overrange	0...999% of selected measurement range

Digital input:

NPN	Pull up 24 VDC / 6.9 mA
PNP	Pull down 0 VDC / 6.9 mA
Trig level low	< 6 VDC
Trig level high	> 10.5 VDC
Pulse width	> 30 ms

Electrical specifications - Output:

Current output:

Signal range	0...20 mA
Min. signal range (span)	5 mA
Max. offset	50% of selected max. value
Load (max.)	20 mA / 600 Ω / 12 VDC
Load stability	< ±0.01% of span/100 Ω
Current limit	< 23 mA

Voltage output through internal shunt:

Signal range	0...10 VDC
Min. signal range (span)	250 mVDC
Max. offset	50% of selected max. value
Load (min.)	500 kΩ
Voltage limit	< 11.5 VDC

Observed authority requirements:

EMC	2014/30/EU
RoHS	2011/65/EU
EAC	TR-CU 020/2011

Of span = Of the presently selected range

Order

Type
2261

Hardware programming

JP1	JP2	Output range	MENU 4.3
OFF	OFF	0...10 mA	001
		0...20 mA	002
ON	OFF	0...500 mV	003
		0...1000 mV	004
OFF	ON	0...5 V	005
		0...10 V	006

BLOCK DIAGRAM

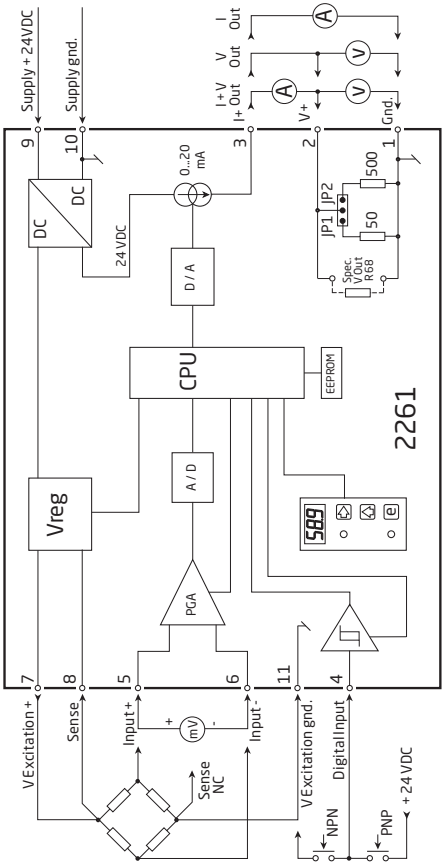

Routing diagram

If no buttons are pressed for a period of 2 minutes, display returns to stage 0.0

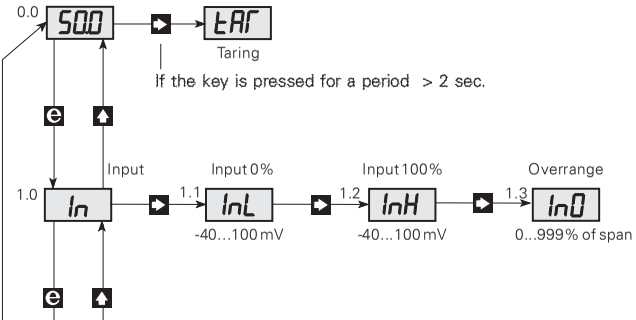

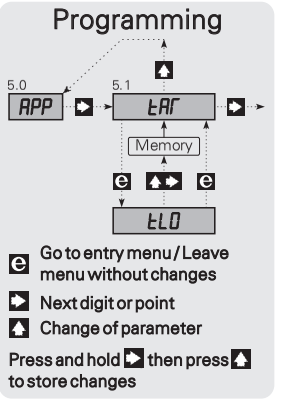

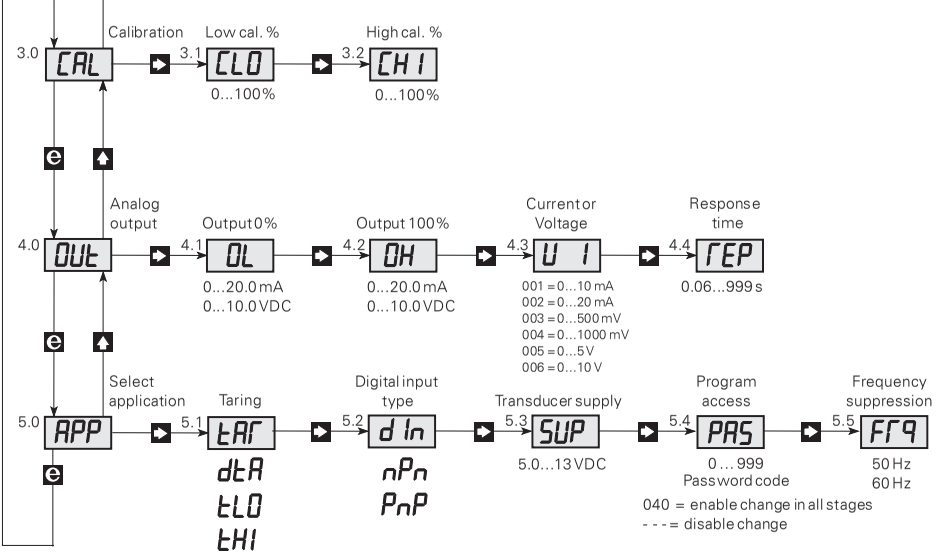
Calibration
Low cal. %
High cal. %
3.0
CAL
3.1
CLO
3.2
CH 1
0...100%
0...100%
e
Analog output
Output 0%
Output 100%
Current or Voltage
Response time
4.0
OUt
4.1
OL
4.2
OH
4.3
U 1
4.4
rEP
0...20.0 mA
0...10.0 VDC
0...20.0 mA
0...10.0 VDC
001 = 0...10 mA
002 = 0...20 mA
003 = 0...500 mV
004 = 0...1000 mV
005 = 0...5 V
006 = 0...10 V
0.06...999 s
e
Select application
Taring
Digital input type
Transducer supply
Program access
Frequency suppression
5.0
APP
5.1
tAr
5.2
d In
5.3
SUP
5.4
PAS
5.5
Fr9
dtA
tLO
tHI
nPn
PnP
5.0...13 VDC
0 ... 999
Password code
50 Hz
60 Hz
040 = enable change in all stages
- - - = disable change
e

PROGRAMMING / OPERATING THE FUNCTION KEYS

DOCUMENTATION FOR ROUTING DIAGRAM

General

The programming is menu-controlled. The main menus are numbered in level 0 (X.0), and the submenus are numbered in level 1 (X.1 - X.5). Each submenu has an accompanying entry menu. The menus are structured in such a way that the menus most frequently used are closer to the default menu 0.0. Please note that programming is only possible when submenu 5.4 PAS has the value 040.

Main, sub, and entry menus are selected by the 3 function keys e, ▶, and ▲ as outlined in the routing diagram. Activating e in the submenus will display the set value in the entry menu.

In entry menus, the digit that can be changed will flash. Active digit position is shifted by the ▶ key and changed by the ▲ key. When the decimal point flashes, its position can be shifted by the ▲ key.

In entry menus with fixed parameters, you switch between the parameters by the ▲ key. Store by first activating the ▶ key and then the ▲ key simultaneously.

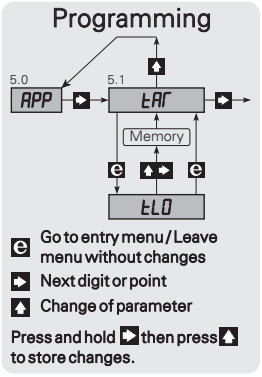

Press e to return to the previous menu without changing the parameter.

0.0 DEFAULT - The input value is displayed in % of the input span.

At power ON, or if no keys have been activated for a period of 2 minutes, the display returns to default.

tAR - Taring

When submenu 5.1 has been selected for {tLO or tHI}, activating the key for more than 2 s will tare the input value to the value it had when activated. The input span is not affected but is kept relative to the new offset value.

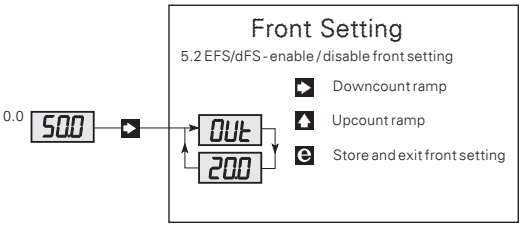

1.0 In - SETTING OF INPUT SPAN

1.1 InL - Setting of 0% input value
Valid selections are -40...100 mV.

1.2 InH - Setting of 100% input value
Valid selections are -40...100 mV.

1.3 InO - Setting of overrange
The analogue output follows the set input span on a linear basis {1.1 - InL and 1.2 - InH} with a limit at 20.5 mA (normally approx. 103% input span).

When the input signal is < or > the set input span, the display will track this and show -xx or xxx% until the input begins to limit.

The overrange is set in % of the input span and guarantees that the input does not begin to limit within the percentage overrange, neither below nor above the set input span, provided that the input span ± overrange is within the signal range -40 to 100 mV.

Setting the overrange does not affect the analogue output.

If the overrange measurement is to be included in the analogue output signal, the output signal for the set input span must be selected to provide room for the overrange within the signal range of the output (0...20 mA / 0...10 VDC).

Example:

A signal of 5...15 mV corresponds to a weight of 0...1000 kilo.

It must be possible to detect a 50% overrange of the scale on the analogue output of the mV transmitter at the same time as the display shows 150%.

The following settings will result in the requested function with an output signal of 4...19.9 mA:

Input: InL = 5.0, InH = 15.0, InO = 50.0

Output: OL = 4.0, OH = 14.6, UI = 002

Please note that the output span has been set to (14.6 mA - 4.0 mA) = 10.6 mA which, with an addition of 50%, will result in a span of (10.6 + (10.6 * 50/100)) = 15.9 mA.

3.0 CAL - SETTING OF CALIBRATION VALUES

The calibration function is a relative calibration, i.e. the percentage input value for the low calibration must be entered in submenu 3.1{CLO - Calibration Low}, and the percentage input value for the high calibration must be entered in submenu 3.2 {CHI - Calibration High}. The entered percentages are used for calculating the actual input span.
When {CHI - Calibration High} is activated, the calculation is made using the percentages in {CLO} and {CHI}.

3.1 CLO - Setting of low calibration value

Key E. Enter the calibration value by the ▶ and ▲ keys.

Connect the low calibration signal to the input. Activate the ▶ and ▲ keys simultaneously.

3.2 CHI - Setting of high calibration value

Key E. Enter the calibration value by the ▶ and ▲ keys.

Connect the high calibration signal to the input. Activate the ▶ and ▲ keys simultaneously.

The input span is now calculated using the entered calibration values. The mV values are read from the submenus {1.1 - InL and 1.2 - InH}.

4.0 OUt - SETTING OF ANALOGUE OUTPUT

4.1 OL - Low - 0% setting of analogue output

Valid selections are current in the range 0.0...20.0 mA or voltage in the range 0.0...10.0 VDC.

4.2 OH - High - 100% setting of analogue output

Valid selections are current in the range 0.0...20.0 mA or voltage in the range 0.0...10.0 VDC.

4.3 UI - Selection of current or voltage output

See the hardware programming for correct jumper setting. Possible selections are:

001 = Current output in the range 0...10 mA

002 = Current output in the range 0...20 mA

003 = Voltage output in the range 0...500 mV

004 = Voltage output in the range 0...1000 mV

005 = Voltage output in the range 0...5 V

006 = Voltage output in the range 0...10 V

4.4 rEP - Setting of response time

Valid selections are 0.0...999 s. If the set response time is < 0.06 s, the response time will be 0.06 s.

5.0 APP - APPLICATION SELECTION

5.1 tAR - Selection of taring type

Possible selections are tLO - 0% taring enable, tHI - 100% taring enable, or dtA - taring disabled.

If tLO is selected, activating the ▶ key for more than 2 s or activating the digital input will tare the input signal to 0%.

If tHI is selected, activating ▶ for more than 2 s or activating the digital input will tare the input signal to 100% (max.).

The 2 types of taring can be used for filling or emptying respectively.

If a 0% (tLO) taring is selected, the analogue input will show 0% after taring. If a 100% (tHI) taring is selected, the input will show 100% after taring corresponding to tara + net weight = gross weight.

Taring is either from the digital input or from front.

5.2 dIN - Selection of digital input type

Possible selections are:

PnP = mechanical contact or open collector transistor connected to +24 VDC.

nPn = mechanical contact or open collector transistor connected to gnd.

5.3 SUP - Setting of supply voltage for transducer

Valid selections are 5.0...13 VDC.

5.4 PAS - Setting of password

Key E. When the password is 040, changes can be made in all menu points. When the password is <> 040, programming is blocked in all menu points, but access is open for reading the settings. Enter the password by the ▶ and ▲ keys.

When the password is correct, activate ▶ and ▲ simultaneously. Valid selections are 0...999.

5.5 Frq - Selection of common mode frequency suppression

Possible selections are 50 or 60 Hz.

Displays Programmable displays with a wide selection of inputs and outputs for display of temperature, volume and weight, etc. Feature linearization, scaling, and difference measurement functions for programming via PReset software.

Ex interfaces Interfaces for analog and digital signals as well as HART® signals between sensors / I/P converters / frequency signals and control systems in Ex zone 0, 1 & 2 and for some devices in zone 20, 21 & 22.

Isolation Galvanic isolators for analog and digital signals as well as HART® signals. A wide product range with both loop-powered and universal isolators featuring linearization, inversion, and scaling of output signals.

Temperature A wide selection of transmitters for DIN form B mounting and DIN rail devices with analog and digital bus communication ranging from application-specific to universal transmitters.

Universal PC or front programmable devices with universal options for input, output and supply. This range offers a number of advanced features such as process calibration, linearization and auto-diagnosis.



www.prelectronics.fr
sales-fr@prelectronics.com

www.prelectronics.de
sales-de@prelectronics.com

www.prelectronics.es
sales-es@prelectronics.com

www.prelectronics.it
sales-it@prelectronics.com

www.prelectronics.se
sales-se@prelectronics.com

www.prelectronics.com
sales-uk@prelectronics.com

www.prelectronics.com
sales-us@prelectronics.com

www.prelectronics.cn
sales-cn@prelectronics.com

www.prelectronics.be
sales-be@prelectronics.com

Head office

Denmark
PR electronics A/S
Lerbakken 10
DK-8410 Rønde

www.prelectronics.com
sales@prelectronics.dk
tel. +45 86 37 26 77
fax +45 86 37 30 85

DS CERTIFIED
QUALITY SYSTEM AND ENVIRONMENTAL MANAGEMENT SYSTEM
DS/EN ISO 9001
DS/EN ISO 14001
DANAK