PN7097
PN-001BRER14-QFRKG/US/ /V

Pressure sensors

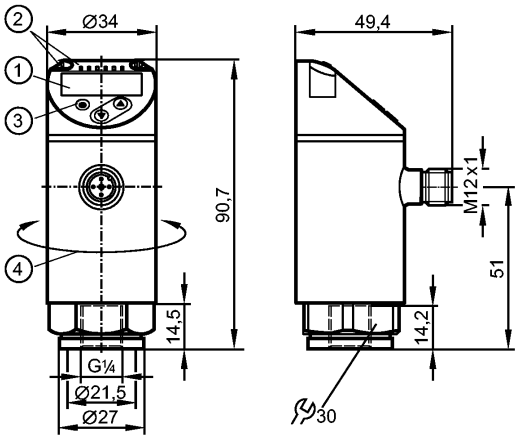

1: 4-digit alphanumeric display / alternating indication of red and green
2: LEDs (display unit / switching status)
3: Programming button
4: Upper part of the housing can be rotated by 345°

Product characteristics

Electronic pressure monitor
M12 connector
Function programmable
Measuring element: ceramic-capacitive pressure measuring cell
Process connection: G ¼ I
2 outputs OUT1 = switching output OUT2 = switching output
4-digit alphanumeric display / alternating indication of red and green
Measuring range: 0...1000 mbar / 0...14.5 psi / 0...100 kPa / 0...29.5 inHg

Application

Application		Type of pressure: relative pressure Group 2 fluids according to the Pressure Equipment Directive (PED), group 1 fluids on request			
Pressure rating		10000 mbar	145 psi	1000 kPa	290 inHg
Bursting pressure min.		30000 mbar	450 psi	3000 kPa	880 inHg
Medium temperature	[°C]	-25...80			

Electrical data

Electrical design		DC PNP/NPN
Operating voltage	[V]	18...30 DC [1])
Current consumption	[mA]	< 35
Insulation resistance	[MΩ]	> 100 (500 V DC)
Protection class		III
Reverse polarity protection		yes

Outputs

Output		2 outputs OUT1 = switching output OUT2 = switching output
Output function		2 x normally open / closed programmable
Current rating	[mA]	150; 200 (...60 °C); 250 (...40 °C)
Voltage drop	[V]	< 2.5
Short-circuit protection		pulsed
Overload protection		yes
Switching frequency	[Hz]	≤ 170

PN7097 - Electronic pressure monitor - eclass: 27201302 / 27-20-13-02

Measuring / setting range				
Measuring range	0...1000 mbar	0...14.5 psi	0...100 kPa	0...29.5 inHg
Setting range				
Set point, SP	10...1000 mbar	0.1...14.5 psi	1.0...100 kPa	0.2...29.5 inHg
Reset point, rP	5...995 mbar	0.05...14.45 psi	0.5...99.5 kPa	0.1...29.4 inHg
in steps of	5 mbar	0.05 psi	0.5 kPa	0.1 inHg
Accuracy / deviations				
Accuracy / deviations (in % of the span)				
Switch point accuracy	< ± 0.5			
Characteristics deviation *)	< ± 0.25 (BFSL) / < ± 0.5 (LS)			
Hysteresis	< ± 0.25			
Repeatability **)	< ± 0.1			
Long-term stability ***)	< ± 0.05			
Temperature coefficients (TEMPCO) in the temperature range -25...80° C (in % of the span per 10 K)				
Greatest TEMPCO of the zero point	0.2			
Greatest TEMPCO of the span	0.2			
Reaction times				
Power-on delay time [s]	< 0.3			
Min. response time switching output [ms]	< 3			
Delay time programmable dS, dr [s]	0...50			
Integrated watchdog	yes			
Software / programming				
Programming options	hysteresis / window function; NO / NC; output polarity; on delay, off delay; damping; display unit			
Interfaces				
IO-Link device				
Transfer type	COM2 (38.4 kBaud)			
IO-Link revision	1.1			
SDCI standard	IEC 61131-9			
IO-Link device ID	405 d / 00 01 95 h			
Profiles	Smart Sensor: Process Data Variable; Device Identification, Device Diagnosis			
SIO mode	yes			
Required master port class	A			
Process data analogue	1			
Process data binary	2			
Min. process cycle time [ms]	2.3			
Environment				
Ambient temperature [°C]	-25...80			
Storage temperature [°C]	-40...100			
Protection	IP 65 / IP 67			
Tests / approvals				
Pressure equipment directive	Sound engineering practice			
EMC	DIN EN 61000-6-2 DIN EN 61000-6-3			
Shock resistance	DIN EN 60068-2-27	50 g (11 ms)		
Vibration resistance	DIN EN 60068-2-6	20 g (10...2000 Hz)		
MTTF [Years]	224.01			
UL approval number	J001			
Mechanical data				
Process connection	G ¼ I			
Materials (wetted parts)	1.4404; ceramics; FKM			
Housing materials	1.4404; PBT+PC-GF 30; PBT-GF 20; PC			
Switching cycles min.	100 million			
Tightening torque [Nm]	25...35 (recommended tightening torque²)			
Weight [kg]	0.235			
Displays / operating elements				

PN7097 - Electronic pressure monitor - eclass: 27201302 / 27-20-13-02

Display	Display unit 4 x LED green (mbar, psi, kPa, inHg) Switching status 2 x LED yellow 4-digit alphanumeric display / alternating indication Measured values of red and green
Electrical connection	
Connection	M12 connector; Gold-plated contacts
Wiring	
Core colours BK black BN brown BU blue WH white	 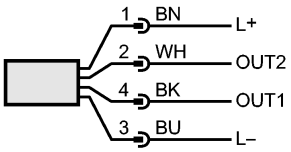 OUT1: switching output or IO-Link OUT2: switching output Colours to DIN EN 60947-5-2
Remarks	
Remarks	[1]) to EN50178, SELV, PELV *) BFSL = Best Fit Straight Line / LS = Limit Value Setting **) with temperature fluctuations < 10 K ***) in% of the span / 6 months [2]) Depends on lubrication, seal and pressure rating
Pack quantity [piece]	1