DATASHEET - P3-100/V/SVB



Main switch, P3, 100 A, rear mounting, 3 pole, Emergency switching off function, With red rotary handle and yellow locking ring, Lockable in the 0 (Off) position

Part no.	**P3-100/V/SVB**
Catalog No.	**088558**
EL-Nummer (Norway)	**0001456133**

Delivery program

Product range			Main switch maintenance switch Repair switch
Part group reference			P3
Stop Function			Emergency switching off function
			With red rotary handle and yellow locking ring
Information about equipment supplied			Auxiliary contact or neutral conductor fitted by user.
Number of poles			3 pole
Auxiliary contacts			
		N/O	0
		N/C	0
Locking facility			Lockable in the 0 (Off) position
Degree of Protection			Front IP65
Design			rear mounting
			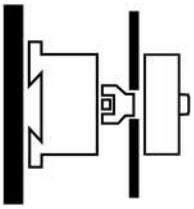
Contact sequence			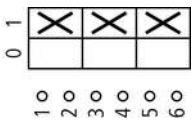
Function			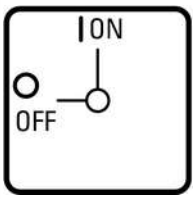
Motor rating AC-23A, 50 - 60 Hz			
400 V	P	kW	55
Rated uninterrupted current	I_u	A	100
Note on rated uninterrupted current $!_u$			Rated uninterrupted current I_u is specified for max. cross-section.

Technical data

General

Standards			IEC/EN 60947, VDE 0660, IEC/EN 60204, CSA, UL Switch-disconnector according to IEC/EN 60947-3 NEMA12
Climatic proofing			Damp heat, constant, to IEC 60068-2-78 Damp heat, cyclic, to IEC 60068-2-30
Ambient temperature			
Open		°C	-25 - +50
Enclosed		°C	-25 - +40

Overvoltage category/pollution degree			III/3
Rated impulse withstand voltage	U_{imp}	V AC	6000
Mechanical shock resistance		g	15
Mounting position			As required

Contacts

Mechanical variables			
Number of poles			3 pole
Auxiliary contacts			
		N/O	0
		N/C	0
Electrical characteristics			
Rated operational voltage	U_e	V AC	690
Rated uninterrupted current	I_u	A	100
Note on rated uninterrupted current I_u			Rated uninterrupted current I_u is specified for max. cross-section.
Load rating with intermittent operation, class 12			
AB 25 % DF		x I_e	2
AB 40 % DF		x I_e	1.6
AB 60 % DF		x I_e	1.3
Short-circuit rating			
Fuse		A gG/gL	100
Rated short-time withstand current (1 s current)	I_{cw}	A_{rms}	2000
Note on rated short-time withstand current Icw			Current for a time of 1 second
Rated conditional short-circuit current	I_q	kA	4

Switching capacity

cos φ rated making capacity as per IEC 60947-3		A	950
Rated breaking capacity cos φ to IEC 60947-3		A	
230 V		A	760
400/415 V		A	740
500 V		A	880
690 V		A	520
Safe isolation to EN 61140			
between the contacts		V AC	440
Current heat loss per contact at I_e		W	7.5
Lifespan, mechanical	Operations	x 10^6	> 0.1
Maximum operating frequency	Operations/h		1200
AC			
AC-3			
Rating, motor load switch	P	kW	
220 V 230 V	P	kW	22
400 V 415 V	P	kW	37
500 V	P	kW	45
690 V	P	kW	37
Rated operational current motor load switch			
230 V	I_e	A	71
400V 415 V	I_e	A	71
500 V	I_e	A	65
690 V	I_e	A	23.8
AC-21A			
Rated operational current switch			
440 V	I_e	A	100
AC-23A			
Motor rating AC-23A, 50 - 60 Hz	P	kW	
230 V	P	kW	30
400 V 415 V	P	kW	55

500 V	P	kW	55
690 V	P	kW	55
Rated operational current motor load switch			
230 V	I_e	A	100
400 V 415 V	I_e	A	100
500 V	I_e	A	96
690 V	I_e	A	68
DC			
DC-1, Load-break switches L/R = 1 ms			
Rated operational current	I_e	A	100
Voltage per contact pair in series		V	60
DC-23A, motor load switch L/R = 15 ms			
24 V			
Rated operational current	I_e	A	50
Contacts		Quantity	1
48 V			
Rated operational current	I_e	A	50
Contacts		Quantity	2
60 V			
Rated operational current	I_e	A	50
Contacts		Quantity	2
120 V			
Rated operational current	I_e	A	25
Contacts		Quantity	3
Control circuit reliability at 24 V DC, 10 mA	Fault probability	H_F	$< 10^{-5}$, < 1 fault in 100000 operations

Terminal capacities

Solid or stranded		mm^2	1 x (2,5 - 35) 2 x (2,5 - 10)
Flexible with ferrules to DIN 46228		mm^2	1 x (1.5 - 25) 2 x (1.5 - 6)
Terminal screw			M5
Tightening torque for terminal screw		Nm	3

Technical safety parameters:

Notes			$B10_d$ values as per EN ISO 13849-1, table C1

Rating data for approved types

Contacts			
Rated operational voltage	U_e	V AC	600
Rated uninterrupted current max.			
Main conducting paths			
General use		A	100
Notes			If used with neutral conductor: I_U = max. 90 A
Auxiliary contacts			
General Use	I_U	A	10
Pilot Duty			A 600 P 600
Switching capacity			
Maximum motor rating			
Single-phase			
120 V AC		HP	5
200 V AC		HP	10
240 V AC		HP	15
Three-phase			
200 V AC		HP	20
240 V AC		HP	25
480 V AC		HP	60
600 V AC		HP	75

Short Circuit Current Rating		SCCR	
Basic Rating		kA	10
max. Fuse		A	150
Terminal capacity			
Solid or flexible conductor with ferrule		AWG	14 - 2
Terminal screw			M5
Tightening torque		lb-in	26.5

Design verification as per IEC/EN 61439

Technical data for design verification			
Rated operational current for specified heat dissipation	I_n	A	100
Heat dissipation per pole, current-dependent	P_{vid}	W	7.5
Equipment heat dissipation, current-dependent	P_{vid}	W	0
Static heat dissipation, non-current-dependent	P_{vs}	W	0
Heat dissipation capacity	P_{diss}	W	0
Operating ambient temperature min.		°C	-25
Operating ambient temperature max.		°C	50
IEC/EN 61439 design verification			
10.2 Strength of materials and parts			
10.2.2 Corrosion resistance			Meets the product standard's requirements.
10.2.3.1 Verification of thermal stability of enclosures			Meets the product standard's requirements.
10.2.3.2 Verification of resistance of insulating materials to normal heat			Meets the product standard's requirements.
10.2.3.3 Verification of resistance of insulating materials to abnormal heat and fire due to internal electric effects			Meets the product standard's requirements.
10.2.4 Resistance to ultra-violet (UV) radiation			UV resistance only in connection with protective shield.
10.2.5 Lifting			Does not apply, since the entire switchgear needs to be evaluated.
10.2.6 Mechanical impact			Does not apply, since the entire switchgear needs to be evaluated.
10.2.7 Inscriptions			Meets the product standard's requirements.
10.3 Degree of protection of ASSEMBLIES			Does not apply, since the entire switchgear needs to be evaluated.
10.4 Clearances and creepage distances			Meets the product standard's requirements.
10.5 Protection against electric shock			Does not apply, since the entire switchgear needs to be evaluated.
10.6 Incorporation of switching devices and components			Does not apply, since the entire switchgear needs to be evaluated.
10.7 Internal electrical circuits and connections			Is the panel builder's responsibility.
10.8 Connections for external conductors			Is the panel builder's responsibility.
10.9 Insulation properties			
10.9.2 Power-frequency electric strength			Is the panel builder's responsibility.
10.9.3 Impulse withstand voltage			Is the panel builder's responsibility.
10.9.4 Testing of enclosures made of insulating material			Is the panel builder's responsibility.
10.10 Temperature rise			The panel builder is responsible for the temperature rise calculation. Eaton will provide heat dissipation data for the devices.
10.11 Short-circuit rating			Is the panel builder's responsibility. The specifications for the switchgear must be observed.
10.12 Electromagnetic compatibility			Is the panel builder's responsibility. The specifications for the switchgear must be observed.
10.13 Mechanical function			The device meets the requirements, provided the information in the instruction leaflet (IL) is observed.

Technical data ETIM 7.0

Low-voltage industrial components (EG000017) / Switch disconnector (EC000216)			
Electric engineering, automation, process control engineering / Low-voltage switch technology / Off-load switch, circuit breaker, control switch / Switch disconnector (ecl@ss10.0.1-27-37-14-03 [AKF060013])			
Version as main switch			Yes
Version as maintenance-/service switch			Yes
Version as safety switch			No
Version as emergency stop installation			Yes
Version as reversing switch			No
Number of switches			1

Max. rated operation voltage Ue AC	V	690
Rated operating voltage	V	690 - 690
Rated permanent current Iu	A	100
Rated permanent current at AC-23, 400 V	A	100
Rated permanent current at AC-21, 400 V	A	100
Rated operation power at AC-3, 400 V	kW	37
Rated short-time withstand current Icw	kA	2
Rated operation power at AC-23, 400 V	kW	55
Switching power at 400 V	kW	55
Conditioned rated short-circuit current Iq	kA	4
Number of poles		3
Number of auxiliary contacts as normally closed contact		0
Number of auxiliary contacts as normally open contact		0
Number of auxiliary contacts as change-over contact		0
Motor drive optional		No
Motor drive integrated		No
Voltage release optional		No
Device construction		Built-in device fixed built-in technique
Suitable for ground mounting		No
Suitable for front mounting 4-hole		No
Suitable for front mounting centre		No
Suitable for distribution board installation		No
Suitable for intermediate mounting		No
Colour control element		Red
Type of control element		Door coupling rotary drive
Interlockable		Yes
Type of electrical connection of main circuit		Screw connection
Degree of protection (IP), front side		IP65
Degree of protection (NEMA)		12

Approvals

Product Standards	UL 60947-4-1;CSA - C22.2 No. 60947-4-1-14; CSA-C22.2 No. 94; IEC/EN 60947-3; CE marking
UL File No.	E36332
UL Category Control No.	NLRV
CSA File No.	12528
CSA Class No.	3211-05
North America Certification	UL listed, CSA certified
Suitable for	Branch circuits, suitable as motor disconnect
Degree of Protection	IEC: IP65; UL/CSA Type 1, 12

Dimensions

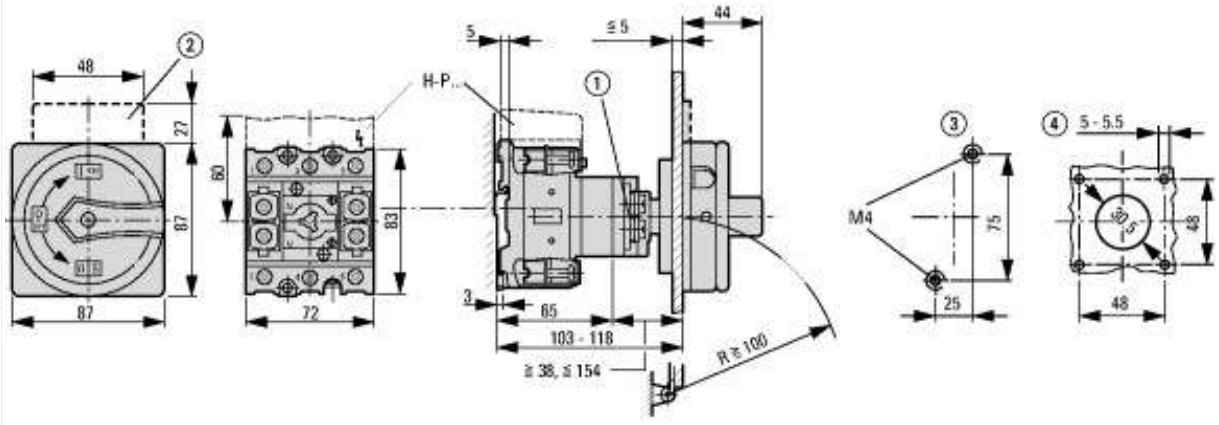

① Shaft and interlock extension with ZAV-P3 + ZVV-P3 possible; max. 4 x 25 = 100 mm
② ZFS-... Label mount not included as standard
③ Drilling dimensions base

④ Drilling dimensions door

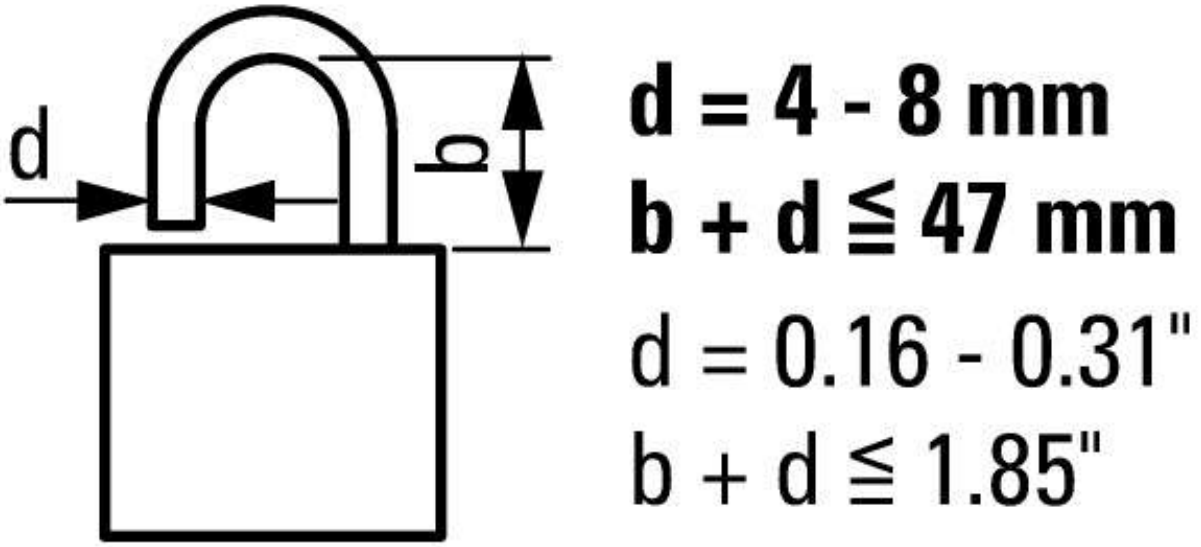

≦ 3 padlocks

Assets (links)

Declaration of CE Conformity

00003104

Instruction Leaflets

IL03802005Z2018_05

© 10/2019 by Eaton Industries GmbH