REVISIONS			
REV.	DESCRIPTION	DATE	INIT
0	INITIAL RELEASE		

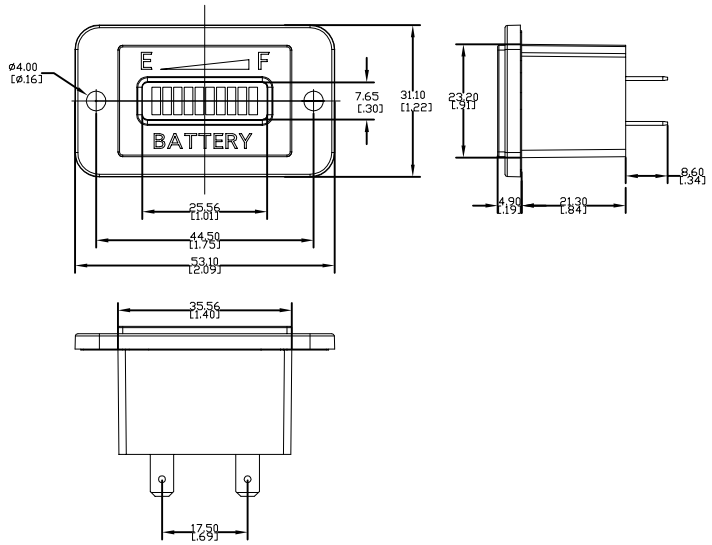

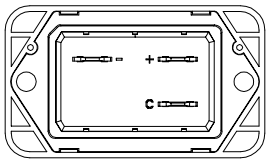

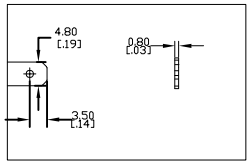

PIN SIZE

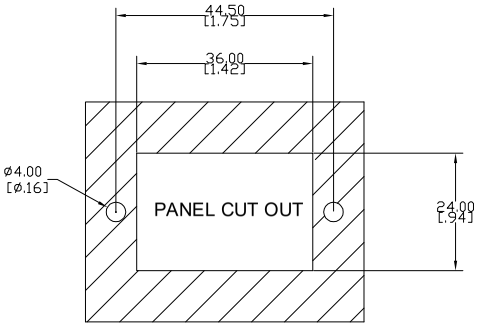

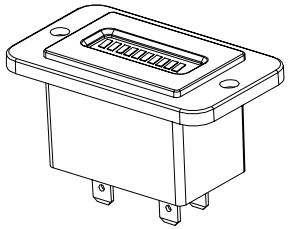

Battery type (customizable)		Battery level									
		1	2	3	4	5	6	7	8	9	10
Lead Acid	12V	10.38	10.59	10.80	11.01	11.22	11.43	11.64	11.85	12.30	>12.3
	24V	20.76	21.18	21.60	22.02	22.44	22.86	23.28	23.70	24.60	>24.6
	36V	31.14	31.77	32.40	33.03	33.66	34.29	34.92	35.55	36.90	> 36.9
	48V	41.52	42.36	43.20	44.04	44.88	45.72	46.56	47.40	49.20	> 49.2
	72V	62.28	63.54	64.80	66.06	67.32	68.58	69.84	71.10	73.80	> 73.8

+	12V/24V: The positive terminal of the power input, connected to the positive pole of the power supply, the range DC 9-28V.
	36V: The positive terminal of the power input, connected to the positive pole of the power supply range DC 25-45V.
	48V: Power input positive terminal, connected to the power supply positive range DC 35-60V.
	72V: Power input positive terminal, connected to the power supply positive range DC 55-85V.
-	Power input negative terminal, connected to the negative pole of the power supply .
C	Key switch, connected to the positive pole of the power supply.

Item	Parameters
Housing material	PC545
Operating Voltage	DC 9-85V
Operating current	≤100mA
Working temperature	-20℃ TO 75℃
Display window size	25.5*7.6mm
Waterproof rate	IP67
Weight	28.1g
Product size	53.1*31.1*34.8mm

1. display
●Battery display mode: 10 LED lights, 1 red, 2 yellow and 7 green.
2. Power function:
●Automatically identify the current remaining power when powered on.
●Power delay function (can be customized: discharge step by step, delay 155S to drop a step, charge step by step, delay 200S to rise a step.
●Different battery types can be customized.

UNLESS OTHERWISE SPECIFIED DIMENSIONS ARE IN INCHES
TOLERANCES ARE:
.X± .1
.XX± .02
.XXX± .005
X°± 1°

COMPUTER GENRATED DRAWING-NO MANUAL CHANGES ALLOWED

DRAWN | DATE
CHECKED | DATE
APPROVED | DATE
MATERIAL: N/A
FINISH: N/A
DO NOT SCALE DRAWING
PROJECTED VIEWS ARE 3RD ANGLE
STATUS: DS4_DESIGN

Runleader®
NINGBO JIANGBEI RUN LEADER ELECTRONICS CO., LT
WWW.RUN-LEADER.COM

TITLE: Battery Indicator
SIZE: A | PART.NO.: RL-BI003-1
SCALE: NTS | SHEET: 1 OF 1 | PROJECT NO.: 276 | REVISION: 0